# Air conditioner

## Installation manual

AJ***TXJ*KG

- Thank you for purchasing this Samsung air conditioner.
- Before operating this unit, please read this manual carefully and retain it for future reference.

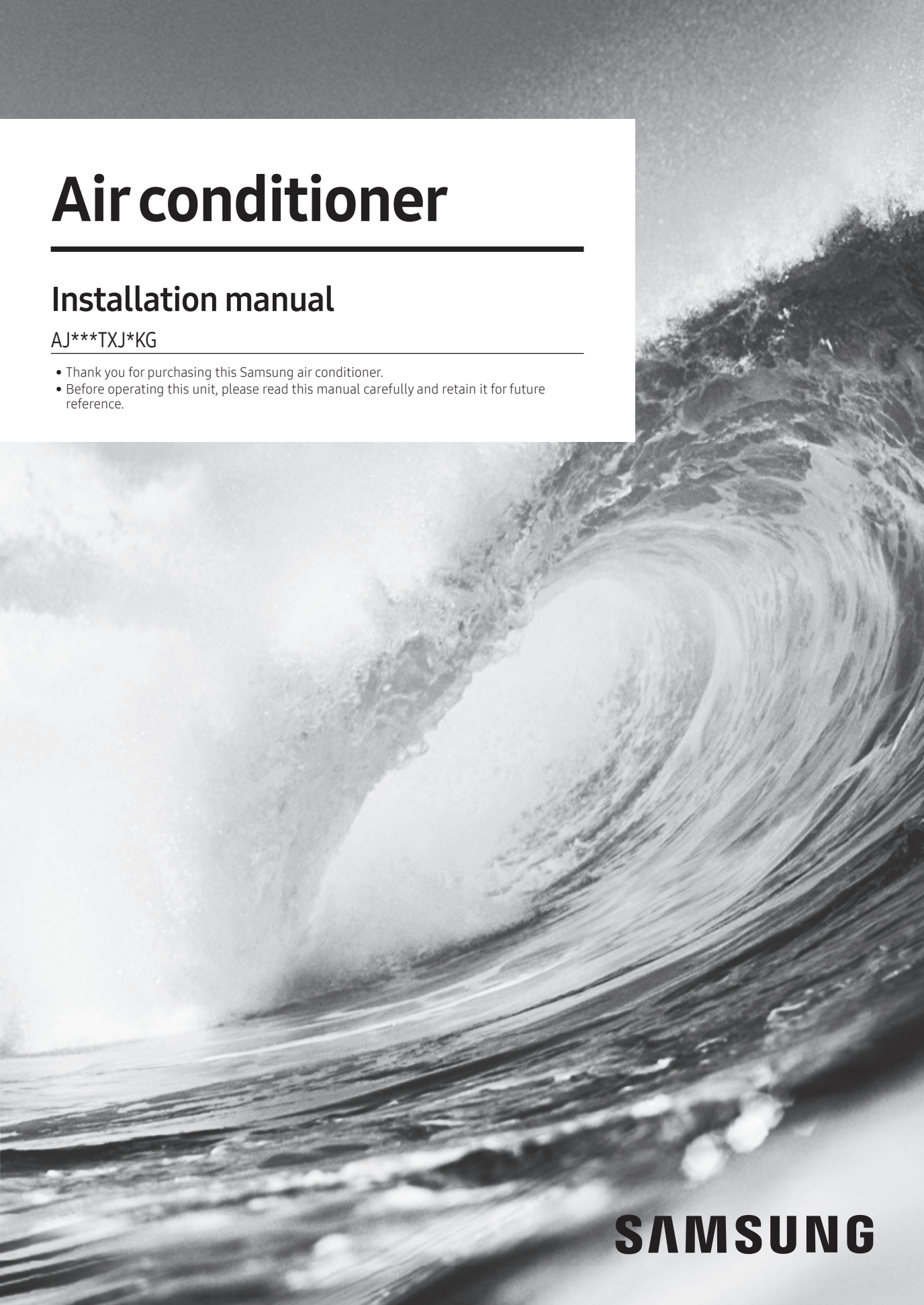

SAMSUNG

# Contents


## Safety Information 3

Safety Information 3

## Installation Procedure 8

Step 1 Choosing the installation location 8
Step 2 Checking and preparing accessories and tools 11
Step 3 Fixing the outdoor unit in place 11
Step 4 Connecting the power cables, communication cable, and controllers 12
Step 5 Optional: Extending the power cable 17
Step 6 Connecting the refrigerant pipe 19
Step 7 Optional: Cutting and flaring the pipes 21
Step 8 Connecting up and removing air in the circuit 22
Step 9 Performing the gas leak test 23
Step 10 Adding refrigerant (R-32) 24
Step 11 Connecting the drain hose to the outdoor unit 25
Step 12 Checking the earthing 26
Step 13 Setting an indoor unit address and installation option 27
Step 14 Cool and Heat modes operation test 39
Step 15 Optional: Setting to Cool or Heat only mode 39
Step 16 Optional: Power improvement mode 40

## Extra procedures 41

Pumping down refrigerant 41
Relocating the indoor and outdoor units 41
Using the stop valve 42

## Appendix 43

Troubleshooting 43


For information on Samsung's environmental commitments and product regulatory obligations, e.g. REACH, visit our sustainability page available via www.samsung.com

# Safety Information



## ⚠ WARNING: Read This Manual

- Read and follow all safety information and instructions before installation, use, or maintenance of this appliance. Incorrect installation, use, or maintenance of this appliance can result in death, serious injury, or property damage. Keep these instructions with this appliance. This manual is subject to change. For the latest version, visit www.samsung.com.

## Notices and notes

To make you aware of safety messages and highlighted information, we use the following notices and notes throughout this manual:

### ⚠ WARNING

Hazards or unsafe practices that may result in severe personal injury or death.

### ⚠ CAUTION

Hazards or unsafe practices that may result in minor personal injury or property damage.

**IMPORTANT**

Information of special interest

**NOTE**

Supplementary information that may be useful

WARNING: Low burning velocity material (This appliance is filled with R-32.)

The user and installer guides should be read carefully.

The user and installer guides should be read carefully.

The service guide should be read carefully.

### ⚠ WARNING

**The installation and testing of this appliance must be performed by a qualified technician.**

- The instructions in this manual are not intended as a substitute for proper training or adequate experience in the safe installation of the appliance.

**Always install the air conditioner in compliance with current local, state, and federal safety standards.**

# Safety Information

## General information

### ⚠ WARNING

- Carefully read the content of this manual before installing the air conditioner and store the manual in a safe place in order to be able to use it as reference after installation.
- For maximum safety, installers should always carefully read the following warnings.
- Store the operation and installation manual in a safe location and remember to hand it over to the new owner if the air conditioner is sold or transferred.
- This manual explains how to install an indoor unit with a split system with two SAMSUNG units. The use of other types of units with different control systems may damage the units and invalidate the warranty. The manufacturer shall not be responsible for damages arising from the use of non compliant units.
- The manufacturer shall not be responsible for damage originating from unauthorized changes or the improper connection of electric and requirements set forth in the "Operating limits" table, included in the manual, shall immediately invalidate the warranty.
- The air conditioner should be used only for the applications for which it has been designed: the indoor unit is not suitable to be installed in areas used for laundry.
- Do not use the units if damaged. If problems occur, switch the unit off and disconnect it from the power supply.
- In order to prevent electric shocks, fires or injuries, always stop the unit, disable the protection switch and contact SAMSUNG's technical support if the unit produces smoke, if the power cable is hot or damaged or if the unit is very noisy.
- Always remember to inspect the unit, electric connections, refrigerant tubes and protections regularly. These operations should be performed by qualified personnel only.
- The unit contains moving parts, which should always be kept out of the reach of children.
- Do not attempt to repair, move, alter or reinstall the unit. If performed by unauthorized personnel, these operations may cause electric shocks or fires.
- Do not place containers with liquids or other objects on the unit.
- All the materials used for the manufacture and packaging of the air conditioner are recyclable.
- The packing material and exhaust batteries of the remote controller(optional) must be disposed of in accordance with current laws.
- The air conditioner contains a refrigerant that has to be disposed of as special waste. At the end of its life cycle, the air conditioner must be disposed of in authorized centres or returned to the retailer so that it can be disposed of correctly and safely.
- Wear protective equipment (such as safety gloves, goggles, and headgear) during installation and maintenance works. Installation/repair technicians may be injured if protective equipment is not properly equipped.
- This appliance is not intended for use by persons (including children) with reduced physical, sensory or mental capabilities, or lack of experience and knowledge, unless they have been given supervision or instruction concerning use of the appliance by a person responsible for their safety. Children should be supervised to ensure that they do not play with the appliance.
- Do not use means to accelerate the defrost operation or to clean, other than those recommended by Samsung.
- Do not pierce or burn.
- Be aware that refrigerants may not contain an odour.
- **For use in Europe:** This appliance can be used by children aged from 8 years and above and persons with reduced physical, sensory or mental capabilities or lack of experience and knowledge if they have been given supervision or instruction concerning use of the appliance in a safe way and understand the hazards involved. Children shall not play with the appliance. Cleaning and user maintenance shall not be made by children without supervision.

## Installing the unit

### ⚠ WARNING

**IMPORTANT: When installing the unit, always remember to connect first the refrigerant tubes, then the electrical lines.**

- Upon receipt, inspect the product to verify that it has not been damaged during transport. If the product appears damaged, DO NOT INSTALL it and immediately report the damage to the carrier or retailer (if the installer or the authorized technician has collected the material from the retailer.)
- After completing the installation, always carry out a functional test and provide the instructions on how to operate the air conditioner to the user.
- Do not use the air conditioner in environments with hazardous substances or close to equipment that release free flames to avoid the occurrence of fires, explosions or injuries.
- Our units should be installed in compliance with the spaces shown in the installation manual, to ensure accessibility from both sides and allow repairs or maintenance operations to be carried out. The unit's components should be accessible and easy to disassemble without endangering people and objects.
- For this reason, when provisions of the installation manual are not complied with, the cost required to access and repair the units (in SAFETY CONDITIONS, as set out in prevailing regulations) with harnesses, ladders, scaffolding or any other elevation system will NOT be considered part of the warranty and will be charged to the end customer.
- While in installation or relocation of the product, do not mix the refrigerant with other gases including air or unspecified refrigerant. Failure to do so may cause pressure increase to result in rupture or injury.
- Do not cut or burn the refrigerant container or pipings.
- Use clean parts such as manifold gauge, vacuum pump, and charging hose for the refrigerant.
- Installation must be carried out by qualified personnel for handling the refrigerant. Additionally, reference the regulations and laws.
- Be careful not to let foreign substances (lubricating oil, refrigerant other than R32, water, etc.) enter the pipings.
- When mechanical ventilation is required, ventilation openings shall be kept clear of obstruction.
- For disposal of the product, follow the local laws and regulations.
- Do not work in a confined place.
- The work area shall be blocked.
- The refrigerant pipings shall be installed in the position where there are no substances that may result in corrosion.
- The following checks shall be performed for installation:
  - The ventilation devices and outlets are operating normally and are not obstructed.
  - Markings and signs on the equipment shall be visible and legible.
- Upon leakage of the refrigerant, ventilate the room. When the leaked refrigerant is exposed to flame, it may cause generation of toxic gases.
- Make sure that the work area is safe from flammable substances.
- To purge air in the refrigerant, be sure to use a vacuum pump.
- Note that the refrigerant has no odour.
- The units are not explosion proof so they must be installed with no risk of explosion.
- This product contains fluorinated gases that contribute to global greenhouse effect. Accordingly, do not vent gases into the atmosphere.
- For installation with handling the refrigerant(R-32), use dedicated tools and piping materials.
- Servicing and installation shall be performed as recommended by the manufacturer. In case other skilled persons are joined for servicing, it shall be carried out under supervision of the person who is competent in handling flammable refrigerants.
- For servicing the units containing flammable refrigerants, safety checks are required to minimise the risk of ignition.
- Servicing shall be performed following the controlled procedure to minimize the risk of flammable refrigerant or gases.
- Do not install where there is a risk of combustible gas leakage.
- Do not place heat sources.

# Safety Information

- Be cautious not to generate a spark as follows:
  - Do not remove the fuses with power on.
  - Do not disconnect the power plug from the wall outlet with power on.
  - It is recommended to locate the outlet in a high position. Place the cords so that they are not tangled.
- If the indoor unit is not R-32 compatible, an error signal appears and the unit will not operate.
- After installation, check for leakage. Toxic gas may be generated and if it comes into contact with an ignition source such as fan heater, stove, and cooker. cylinders, make sure that only the refrigerant recovery cylinders are used.
- Never directly touch any accidental leaking refrigerant.
- This could result in severe wounds caused by frostbite.

## Preparation of fire extinguisher

- If a hot work is to be done, an appropriate fire extinguishing equipment should have been available.
- A dry powder or $CO_2$ fire extinguisher shall be equipped near the charging area.

## Ignition sources free

- Make sure to store the units in a place without continuously operating ignition sources (for example, open flames, an operating gas appliance or an operating electric heater).
- The service engineers shall not use any ignition sources with the risk of fire or explosion.
- Potential ignition sources shall be kept away from the work area where the flammable refrigerant can possibly be released to the surrounding.
- The work area should be checked to ensure that there are no flammable hazards or ignition risks. The “No Smoking” sign shall be attached.
- Under no circumstances shall potential sources of ignition be used while in detection of leakage.
- Make sure that the seals or sealing materials have not degraded.
- Safe parts are the ones with which the worker can work in a flammable atmosphere. Other parts may result in ignition due to leakage.
- Replace components only with parts specified by Samsung. Other parts may result in the ignition of refrigerant in the atmosphere from a leak.

## Area ventilation

- Make sure that the work area is well ventilated before performing a hot work.
- Ventilation shall be made even during the work.
- The ventilation should safely disperse any released gases and preferably expel them into the atmosphere.
- Ventilation shall be made even during the work.

## Leakage detection methods

- The leakage detector shall be calibrated in a refrigerant-free area.
- Make sure that the detector is not a potential source of ignition.
- The leakage detector shall be set to the LFL (lower flammability limit).

- The use of detergents containing chlorine shall be avoided for cleaning because the chlorine may react with the refrigerant and corrode the pipings.
- If leakage is suspected, naked flames shall be removed.
- If a leakage is found while in brazing, the entire refrigerant shall be recovered from the product or isolated (e.g. using shut-off valves). It shall not be directly released to the environment. Oxygen free nitrogen (OFN) shall be used for purging the system before and during the brazing process.
- The work area shall be checked with an appropriate refrigerant detector before and during work.
- Ensure that the leakage detector is appropriate for use with flammable refrigerants.

## Labelling

- The parts shall be labelled to ensure that they have been decommissioned and emptied of refrigerant.
- The labels shall be dated.
- Make sure that the labels are affixed on the system to notify it contains flammable refrigerant.

## Recovery

- When removing refrigerant from the system for servicing or decommissioning, it is recommended to remove the entire refrigerant.
- When transferring refrigerant into cylinders, make sure that only the refrigerant recovery cylinders are used.
- All cylinders used for the recovered refrigerant shall be labelled.
- Cylinders shall be equipped with pressure relief valves and shut-off valves in a proper order.
- The recovery system shall operate normally according to the specified instructions and shall be suitable for refrigerant recovery.
- In addition, the calibration scales shall operate normally.
- Hoses shall be equipped with leak-free disconnect couplings.
- Before starting the recovery, check for the status of the recovery system and sealing state. Consult with the manufacturer if suspected.
- The recovered refrigerant shall be returned to the supplier in the correct recovery cylinders with the Waste Transfer Note attached.
- Do not mix refrigerants in the recovery units or cylinders.
- If compressors or compressor oils are to be removed, make sure that they have been evacuated to the acceptable level to ensure that flammable refrigerant does not remain in the lubricant.
- The evacuation process shall be performed before sending the compressor to the suppliers.
- Only the electrical heating to the compressor body is allowed to accelerate the process.
- Oil shall be drained safely from the system.
- Never install a motor-driven equipment to prevent ignition.
- Empty recovery cylinders shall be evacuated and cooled before recovery.

# Installation Procedure

## Power supply line, fuse or circuit breaker

### ⚠ WARNING

- Always make sure that the power supply is compliant with current safety standards. Always install the air conditioner in compliance with current local safety standards.
- Always verify that a suitable earthing connection is available.
- Verify that the voltage and frequency of the power supply comply with the specifications and that the installed power is sufficient to ensure the operation of any other domestic appliance connected to the same electric lines.
- Always verify that the cut-off and protection switches are suitably dimensioned.
- Verify that the air conditioner is connected to the power supply in accordance with the instructions provided in the wiring diagram included in the manual.
- Always verify that electric connections (cable entry, section of leads, protections...) are compliant with the electric specifications and with the instructions provided in the wiring scheme. Always verify that all connections comply with the standards applicable to the installation of air conditioners.
- Devices disconnected from the power supply should be completely disconnected in the condition of overvoltage category.
- Be sure not to perform power cable modification, extension wiring, and multiple wire connection.
  - It may cause electric shock or fire due to poor connection, poor insulation, or current limit override.
  - When extension wiring is required due to power line damage, refer to "Step 5 Optional: Extending the power cable" in the installation manual.

## Step 1 Choosing the installation location

### Installation location requirements

- The outdoor unit shall be installed in an open space that is always ventilated.
- The local gas regulations shall be observed.
- For installation inside a building (this applies either to indoor or outdoor units installed inside) a minimum room floor area of space conditioned is mandatory according to IEC 60335-2-40:2018 (see the reference table into either the indoor or outdoor unit installation manual).
- To handle, purge, and dispose the refrigerant, or break into the refrigerant circuit, the worker should have a certificate from an industry-accredited authority.
- Do not install the indoor unit in the following areas:
  - Area filled with minerals, splashed oil, or steam. It will deteriorate plastic parts, causing failure or leakage.
  - Area that is close to heat sources.
  - Area that produces substances such as sulfuric gas, chlorine gas, acid, and alkali. It may cause corrosion of the pipings and brazed joints.
  - Area that can cause leakage of combustible gas and suspension of carbon fibers, flammable dust, or volatile flammables.
  - Area where refrigerant leaks and settles.
  - Area where animals may urinate on the product. Ammonia may be generated.
- Do not use the indoor unit for preservation of food items, plants, equipment, and art works. This may cause deterioration of their quality.
- Do not install the indoor unit if it has any drainage problem.
- Do not place the outdoor unit on its side or upside down. Failing to do so may cause the compressor lubrication oil to run into the cooling circuit and lead to a serious damage to the unit.
- Install the unit in a well-ventilated location away from direct sunlight or strong winds.
- Install the unit in a location that would not obstruct any passageways or thoroughfares.
- Install the unit in a location that would not inconvenience or disturb your neighbors, as they could be affected by the noise or the airflow coming from the unit.

- Install the unit in a location where the pipes and the cables can be easily connected to the indoor unit.
- Install the unit on a flat, stable surface that can withstand the weight of the unit. Otherwise, the unit can generate noise and vibration during operation.
- Install the unit so that the air flow is directed towards the open area.
- Maintain sufficient clearance around the outdoor unit, especially from a radio, computer, stereo system, etc.

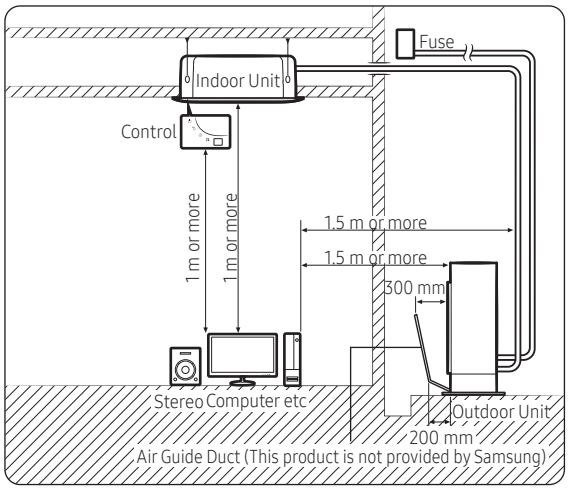


- Install the unit at a height where its base can be firmly fixed in place.
- Make sure that the water dripping from the drain hose runs away correctly and safely.

## ⚠ CAUTION

- You have just purchased a system air conditioner and it has been installed by your installation specialist.
- This device must be installed according to the national electrical rules.
- If your outdoor unit exceeds a net weight of 60 kg, do not install it on a suspended wall, but stand it on a floor.

- When installing the outdoor unit at the seaside, make sure that it is not directly exposed to sea breeze. If you cannot find an adequate place free from direct sea breeze, construct a protection wall or a protective fence.
  - Install the outdoor unit in a place (such as near buildings etc.) where it can be prevented from sea breeze. Failure to do so may cause a damage to the outdoor unit.

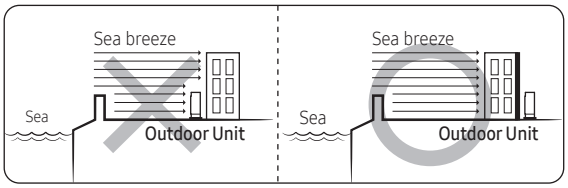


- If you cannot avoid installing the outdoor unit at the seaside, construct a protection wall around to block the sea breeze.
- Construct a protection wall with a solid material such as concrete to block the sea breeze. Make sure that the height and the width of the wall are 1.5 times larger than the size of the outdoor unit. Also, secure a space larger than 700 mm between the protection wall and the outdoor unit for exhausted air to ventilate.

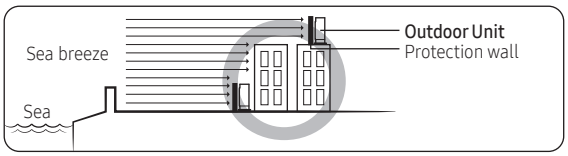


## ⚠ CAUTION

- Depending on the condition of power supply, unstable power or voltage may cause malfunction of the parts or control system. (At the ship or places using power supply from electric generator...etc)
- Install the unit in a place where water can drain smoothly.
- If you have any difficulty finding installation location as prescribed above, contact your manufacturer for details.
- Be sure to clean the sea water and the dust on the heat exchanger of the outdoor unit and apply a corrosion inhibitor on it. (At least once in a year.)

# Installation Procedure

- Check the condition of the product periodically.
  - Check the installation site every 3 months and perform anti-corrosion treatment such as R-Pro supplied by SAMSUNG (Code : MOK-220SA) or commercial water repellent grease and wax, etc., based on the product condition.
  - When the product is to be shut down for a long period of time, such as off-peak hours, take appropriate measures like covering the product.
- If the product installed within 500 m of seashore, special anti-corrosion treatment is required.

  ※ Please contact your local SAMSUNG representative for further details.

## Minimum clearances for the outdoor unit

### When installing 1 outdoor unit

(Unit: mm)

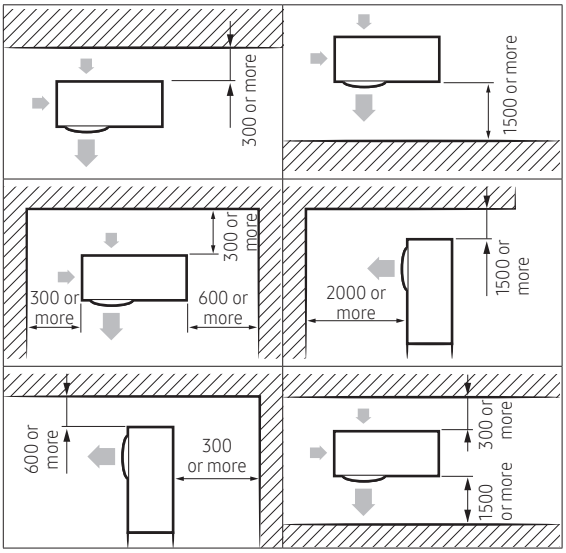


### When installing more than 1 outdoor unit

(Unit: mm)

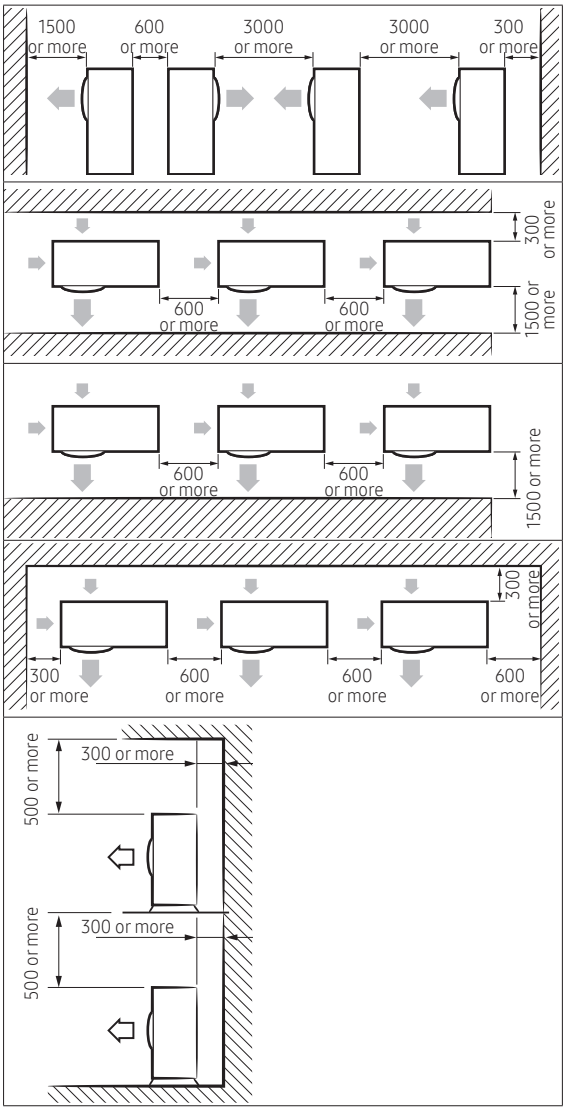


## ⚠ CAUTION

- The outdoor unit must be installed according to the specified distances in order to permit accessibility from each side, to guarantee correct operation, maintenance, and repair of the unit.
  The components of the outdoor unit must be reachable and removable under safe conditions for people and the unit.

## Step 2 Checking and preparing accessories and tools

| 3-wire Power Cable (option) | 2-wire Assembly Cable (option) |
|---|---|
| | |
| Drain Plug | Energy Label |
| | |
| Rubber Leg | Installation Manual |
| | |
| Flare Bolt (Nut 12.70mm;Bolt 9.52mm) (**052/068/080******) | Flare Nuts, 9.52mm outer pipe diameter (**052/068/080******) |
| | |
| Drain Cap (**052/068/080******) | Flare Nuts, 15.88mm outer pipe diameter (**080******) |
| | |
| Tube-connector (Pipe 9.52mm;Bolt 12.70mm) Flare Nuts (12.7mm,outer pipe diameter) (**050******) | Flare Bolt (Nut 12.70mm; Bolt 15.88mm) (**080******) |
| | |

**NOTE**

- Attach Energy Label to the outdoor unit properly when installing.
- Wire assembly cables are optional. If they are not supplied, use standard cables.
- The drain plug and the rubber legs are included only when the air conditioner is supplied without assembly pipes.
- If these accessories are supplied, they are in the accessory package or outdoor unit package.

## Step 3 Fixing the outdoor unit in place

Install the outdoor unit on a rigid and stable base to prevent disturbance from any noise caused by vibration. When installing the unit at a height or in a location exposed to strong winds, fix the unit securely to a support (i.e., a wall or a ground).

1 Position the outdoor unit so that the air flow is directed towards the outside, as indicated by the arrows on the top of the unit.

2 Attach the outdoor unit to the appropriate support using anchor bolts.
   - The earthing wire for the telephone line cannot be used to earth the air conditioner.

3 If the outdoor unit is exposed to strong winds, install shield plates around the outdoor unit, so that the fan can operate correctly.

**NOTE**

- Certainly fix up its rubber leg in order to prevent its vibration and noise.

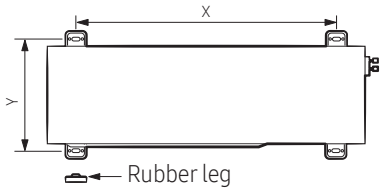


(Unit : mm)

| Model | X | Y |
|---|---|---|
| AJ040/050TXJ2KG | 602 | 310 |
| AJ052/068TXJ3KG AJ080TXJ4KG | 660 | 340 |

## ⚠ CAUTION

- Install a drain outlet at the lowest end around the base for outdoor unit drainage
- When installing the outdoor unit on the roof, waterproof the unit and check the ceiling strength.

# Installation Procedure

### Optional: Fixing the outdoor unit to a wall with a rack

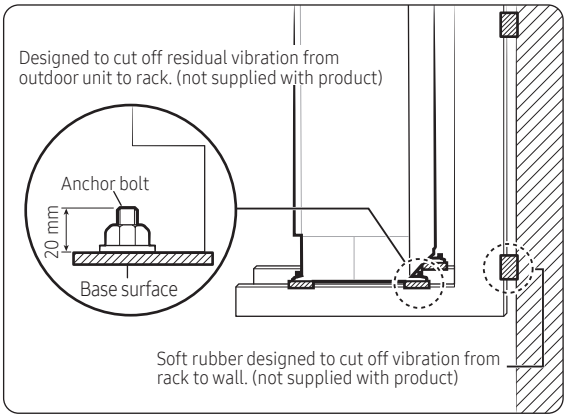


- Install a proper grommet in order to reduce noise and residual vibration transferred by the outdoor unit towards the wall.

## ⚠ CAUTION

- When installing an air guide duct, be sure to check the following:
  - The screws do not damage the copper pipe.
  - The air guide duct is fixed firmly on the guard fan.

## Step 4 Connecting the power cables, communication cable, and controllers

You must connect the following three electrical cables to the outdoor unit:

- The main power cable between the auxiliary circuit breaker and the outdoor unit.
- The outdoor-to-indoor power cable between the outdoor unit and the indoor unit.
- The communication cable between the outdoor unit and the indoor unit.

## ⚠ CAUTION

- During installation, make first the refrigerant connections and then the electrical connections. If the unit is uninstalled, first disconnect the electrical cables and then the refrigerant connections.
- Connect the air conditioner to the earthing system before making the electrical connections.

**NOTE**

- Especially, if your outdoor unit is the one designed for Russian and European markets, consult the supply authority, if necessary, to estimate and reduce the supply system impedance before installation.

## ⚠ CAUTION

- For the product that uses the R-32 refrigerant, be cautious not to generate a spark by keeping the following requirements:
  - Do not remove the fuses with power on.
  - Do not disconnect the power plug from the wall outlet with power on.
  - It is recommended to locate the outlet in a high position. Place the cords so that they are not tangled.

## Conncting the cables to the outdoor unit

### AJ040/050TXJ2KG

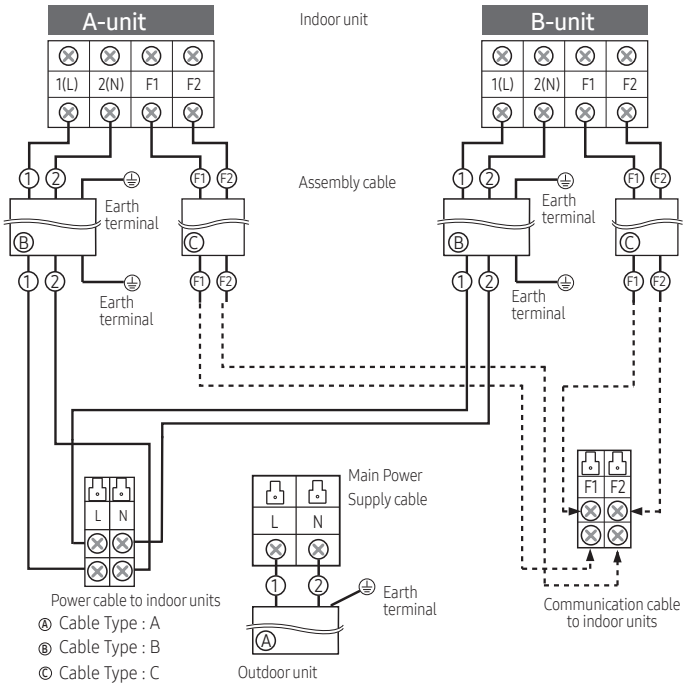


### AJ052/068TXJ3KG

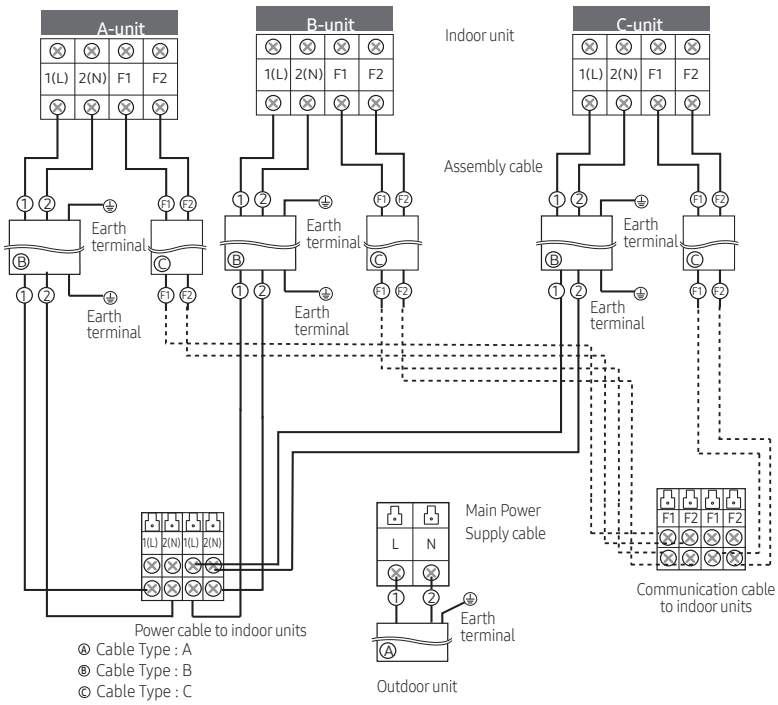

# Installation Procedure



**AJ080TXJ4KG**

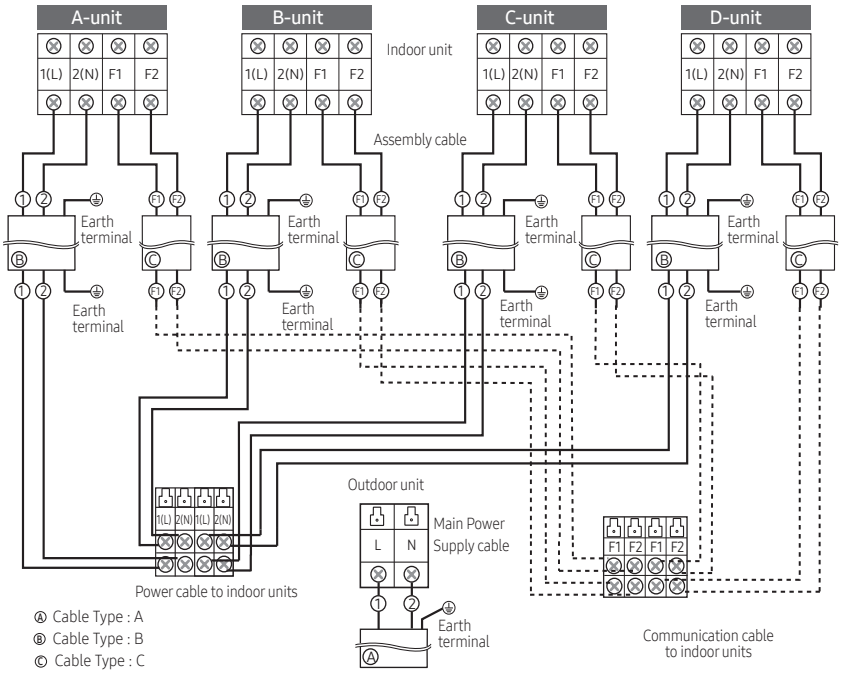


**Specification for circuit breaker and power supply cord**

- Power supply cord is not supplied with air conditioner.
- Select the power supply cord in accordance with relevant local and national regulations.
- Wire size must comply with the applicable local and national code.
- Specifications for local wiring power supply cord and branch wiring are in compliance with local cord.

| Model | | Outdoor Units Rated | | Maximum Input Current[A] | | | Power Supply | |
|---|---|---|---|---|---|---|---|---|
| Outdoor Unit | Indoor Unit | Hz | Volts | Outdoor | Indoor(Max.) | Total | MCA | MFA |
| AJ040TXJ2KG | 2 Room | 50 | 1phase,220-240 | 8.5 | 0.8 | 9.3 | 9.30 | 10.63 |
| AJ050TXJ2KG | 2 Room | 50 | 1phase,220-240 | 11.0 | 0.8 | 11.8 | 11.80 | 13.75 |
| AJ052TXJ3KG | 3 Room | 50 | 1phase,220-240 | 11.0 | 1.2 | 12.2 | 12.20 | 13.75 |
| AJ068TXJ3KG | 3 Room | 50 | 1phase,220-240 | 16.6 | 1.2 | 17.8 | 17.80 | 20.75 |
| AJ080TXJ4KG | 4 Room | 50 | 1phase,220-240 | 16.6 | 1.6 | 18.2 | 18.20 | 20.75 |

**NOTE**

1. Power Supply cords of parts of appliances for outdoor use shall not be lighter than polychloroprene sheathed flexible cord. (Code designation IEC:60245 IEC 57 / CENELEC: H05RN-F , IEC:60245 IEC 66 / CENELEC: H07RN-F )
2. Select power supply cord based on MCA.
3. MFA is used to select the circuit breaker and the ground fault circuit interrupter (earth leakage circuit breaker).
4. MCA represents maximum input current.
5. MFA represents capacity which may accept MCA.

**Abbreviations**

- MCA : Min. Circuit Amps. (A)
- MFA : Max. Fuse Amps. (A)

| Screw | Tighten Torque(kgf.cm) | Position |
|---|---|---|
| M4 | 12.0~18.0 | 1(L),2(L),L,N,F1,F2 |

**Tightening power terminal**

- Connect the cables to the terminal board using the compressed ring terminal.
- Use rated cables only.
- Connect the cables with driver and wrench that can apply the rated torque to the screws.
- Make sure that appropriate tightening torque is applied for cable connection. If the terminal is loose, arc heat may occur and cause fire and if the terminal is connected too firmly, terminal may get damaged.

## Transmitter installation(option)

- AJ040TXJ2KG/AJ050TXJ2KG/AJ052TXJ3KG/AJ068TXJ3KG/AJ080TXJ4KG

PCB MAIN - OUT

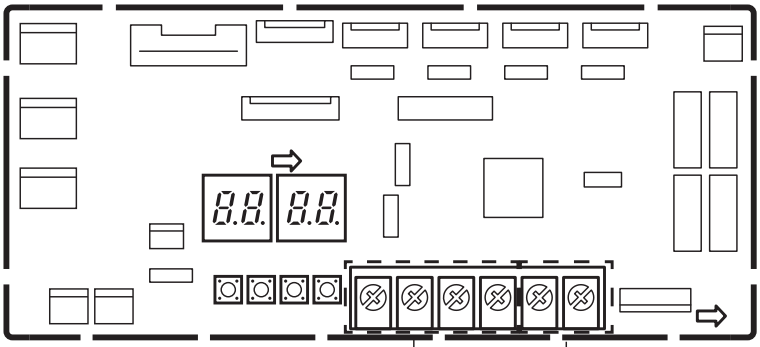

Do not connect the power and communication wires to these terminal blocks

Terminal blocks(R1,R2) for connection with the Upper Controller (DMS, Touch, On/Off Controller, etc.)

1. Turn the power off and take off the cover of the outdoor units.
2. Connect R1/R2 lines which are upper controller communication cables referring to upper figure .
   (Upper controller power should be off.)
3. Assemble a cover of the outdoor unit and turn the power on.
4. Check the communication status.
5. If you install a upper controller to the outdoor unit, every indoor unit which is connected to the outdoor unit can be controlled simultaneously.

# Installation Procedure



### Outdoor-to-indoor power terminal specifications

- Connect the cables to the terminal board using the compressed ring terminal.
- Cover a solderless ring terminal and a connector part of the power cable and then connect it.

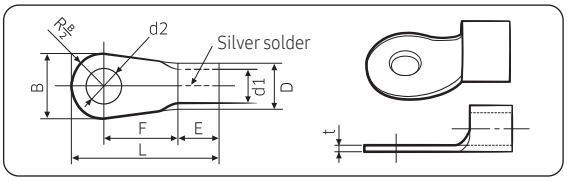


| Norminal dimensions for cable (mm²) | Norminal dimensions for screw (mm) | B | | D | | d1 | | E | F | L | d2 | | t |
|---|---|---|---|---|---|---|---|---|---|---|---|---|---|
| | | Standard dimension (mm) | Allowance (mm) | Standard dimension (mm) | Allowance (mm) | Standard dimension (mm) | Allowance (mm) | Min. (mm) | Min. (mm) | Max. (mm) | Standard dimension (mm) | Allowance (mm) | Min. (mm) |
| 1.5 | 4 | 6.6 | ±0.2 | 3.4 | +0.3<br>-0.2 | 1.7 | ±0.2 | 4.1 | 6 | 16 | 4.3 | +0.2<br>0 | 0.7 |
| | 4 | 8 | | | | | | | | | | | |
| 2.5 | 4 | 6.6 | ±0.2 | 4.2 | +0.3<br>-0.2 | 2.3 | ±0.2 | 6 | 6 | 17.5 | 4.3 | +0.2<br>0 | 0.8 |
| | 4 | 8.5 | | | | | | | | | | | |
| 4 | 4 | 9.5 | ±0.2 | 5.6 | +0.3<br>-0.2 | 3.4 | ±0.2 | 6 | 5 | 20 | 4.3 | + 0.2<br>0 | 0.9 |

- Connect the rated cables only.
- Connect using a driver which is able to apply the rated torque to the screws.
- If the terminal is loose, fire may occur caused by arc. If the terminal is connected too firmly, the terminal may be damaged.

| Tightening torque (kgf • cm) | |
|---|---|
| M4 | 12.0 to 18.0 |
| M5 | 20.0 to 30.0 |

- 1N · m = 10 kgf · cm

## ⚠ CAUTION

- When connecting cables, you can connect the cables to the electrical part or connect them through the holes below depending on the spot.
- Connect the communication cable between the indoor and outdoor units through a conduit to protect against external forces, and feed the conduit through the wall together with refrigerant piping.
- Remove all burrs at the edge of the knock-out hole and secure the cable to the outdoor knock-out using lining and bushing with an electrical insulation such as rubber and so on.
- Must keep the cable in a protection tube.
- Keep distances of 50mm or more between power cable and communication cable.
- When the cables are connected through the hole, remove the Plate bottom.

### Outdoor-to-indoor power and communication cables specifications

| Indoor power supply | | |
|---|---|---|
| Power supply | Max/Min (V) | Indoor power cable |
| 1Φ, 220-240V, 50 Hz | ±10% | 1.5 mm² ↑, 3 wires |
| Communication cable | | |
| 0.75 to 1.5 mm², 2 wires | | |

- Power supply cords of parts of appliances for outdoor use shall not be lighter than polychloroprene sheathed flexible cord. (Code designation IEC:60245 IEC 57 / CENELEC: H05RN-F or IEC:60245 IEC 66 / CENELEC: H07RN-F)
- When installing the indoor unit in a computer room or net work room, server room or in the presence of risk of disturbance to the communication cable, use the double shielded (tape aluminium / polyester braid + copper ) cable of FROHH2R type.

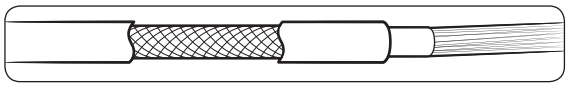

## Step 5 Optional: Extending the power cable

1 Prepare the following tools.

| Tools | Spec | Shape |
|---|---|---|
| Crimping pliers | MH-14 | |
| Connection sleeve (mm) | 20xØ6.5 (HxOD) | |
| Insulation tape | Width 19 mm | |
| Contraction tube (mm) | 70xØ8.0 (LxOD) | |

2 As shown in the figure, peel off the shields from the rubber and wire of the power cable.
   - Peel off 20 mm of cable shields from the pre-installed tube.

## ⚠ CAUTION

- For information about the power cable specifications for indoor and outdoor units, refer to the installation manual.
- After peeling off cable wires from the pre-installed tube, insert a contraction tube.
- If cable wires are connected without using connecting sleeves, their contact area becomes reduced, or corrosion develops on the outer surfaces of the wires (copper wires) over a long time. This may cause an increase of resistance (reduction of passing current) and consequently may result in a fire.

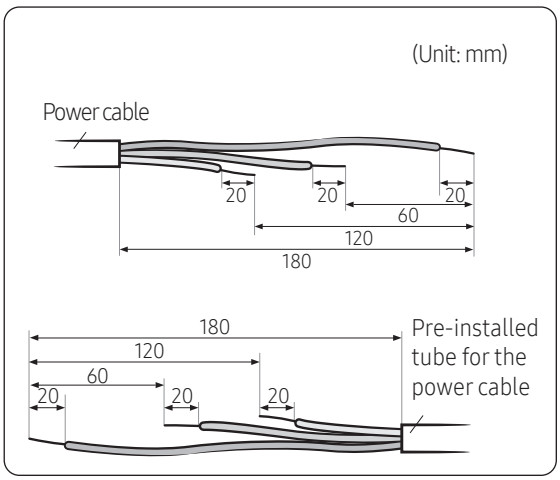

# Installation Procedure



**3** Insert both sides of core wire of the power cable into the connection sleeve.

- Method 1: Push the core wire into the sleeve from both sides.
- Method 2: Twist the wire cores together and push it into the sleeve.

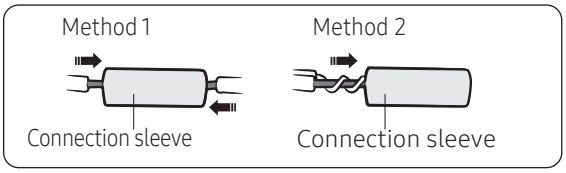


**4** Using a crimping tool, compress the two points and flip it over and compress another two points in the same location.

- The compression dimension should be 8.0.

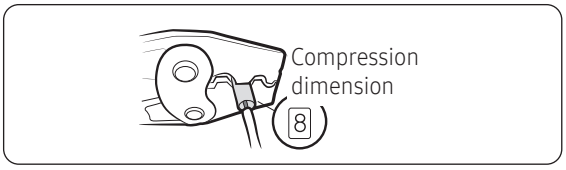


- After compressing it, pull both sides of the wire to make sure it is firmly pressed.

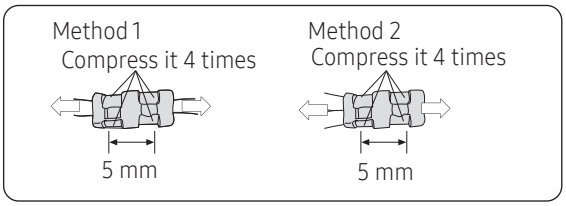


**5** Wrap it with the insulation tape twice or more and position your contraction tube in the middle of the insulation tape.

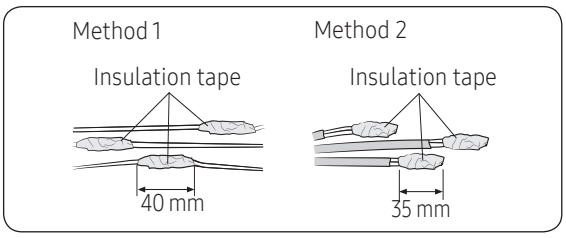


**6** Apply heat to the contraction tube to contract it.

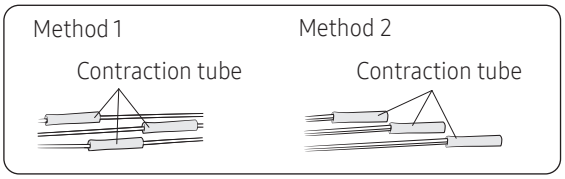


**7** After tube contraction work is completed, wrap it with the insulation tape to finish.
Three or more layers of insulation are required.

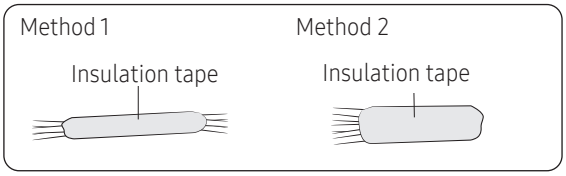


## ⚠ CAUTION

- Make sure that the connection parts are not exposed to outside.
- Be sure to use insulation tape and a contraction tube made of approved reinforced insulating materials that have the same level of withstand voltage with the power cable. (Comply with the local regulations on extensions.)

## ⚠ WARNING

- In case of extending the electric wire, please DO NOT use a round-shaped Pressing socket.
  - Incomplete wire connections can cause electric shock or a fire.

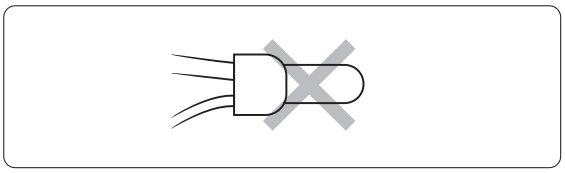

## Step 6 Connecting the refrigerant pipe

◆ **AJ040/050TXJ2KG**

1 Piping outside diameter

| Indoor unit | Out unit | Power supply Ø, V, Hz | Outside diameter | |
|---|---|---|---|---|
| | | | Liquid | Gas |
| AR**F07/09/12*****, AJ026/035TN*D*G | AJ040TXJ2KG | 1,220-240, 50 | 1/4" | 3/8" |
| AR**F07/09/12*****, AJ016/020/026 /035TN*D*G | AJ050TXJ2KG | 1,220-240, 50 | 1/4" | 3/8" |
| AR**F18*****, AJ052TNJDKG | | | | 1/2" |

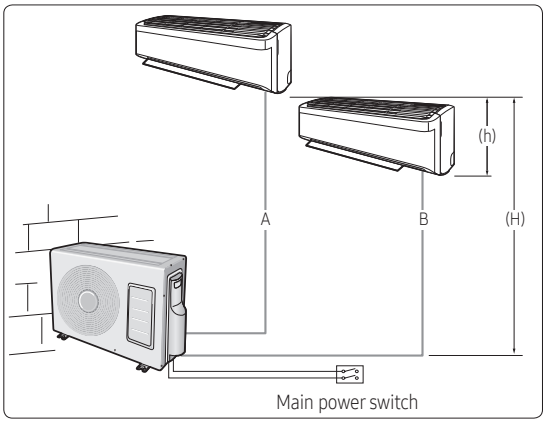


**NOTE**

- This product requires no additional refrigerant charge up to the maximum allowable pipe length.

| Maximum allowable refrigerant charge amount | |
|---|---|
| AJ040TXJ2KG/EU | 980 g |
| AJ050TXJ2KG/EU | 1180 g |

- AJ040TXJ2KG Outdoor unit cannot be connected to the following indoor unit combination.
  -AJ0**TNNDKG/AJ0**TNLDEG

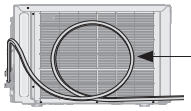


2 Piping length and the height

| | 1 Room max length | 2 Room total max length | Max height between indoor unit & outdoor unit | Max height between indoor units |
|---|---|---|---|---|
| Dimension | 20m | 30m | 15m | 7.5m |
| Composition | A,B | A+B | (H) | (h) |

◆ **AJ052/068TXJ3KG**

1 Piping outside diameter

| Indoor unit | Out unit | Power supply Ø, V, Hz | Outside diameter | |
|---|---|---|---|---|
| | | | Liquid | Gas |
| AR**F07/09/12*****, AJ016/020/026 /035TN*D*G | AJ052TXJ3KG AJ068TXJ3KG | 1,220-240, 50 | 1/4" | 3/8" |
| AR**F18*****, AJ052TN*D*G | | | | 1/2" |

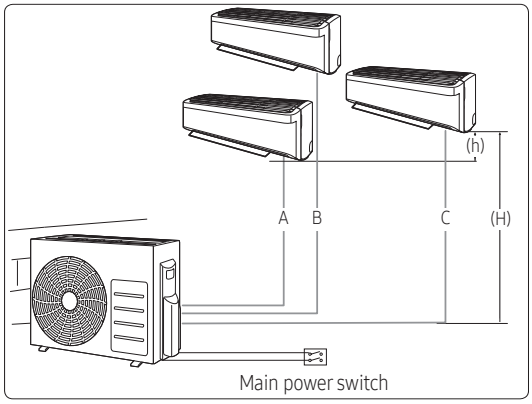


**NOTE**

- AJ052TXJ3KG Outdoor unit cannot be connected to the following indoor unit combination.
  -AJ052TNNDKG/AJ052BNMDEG
- AJ068TXJ3KG Outdoor unit cannot be connected to the following indoor unit combination.
  -AJ***TNJDKG

2 Piping length and the height

| | 1 Room max length | 3 Room total max length | Max height between indoor unit & outdoor unit | Max height between indoor units |
|---|---|---|---|---|
| Dimension | 25m | 50m | 15m | 7.5m |
| Composition | A,B,C | A+B+C | (H) | (h) |

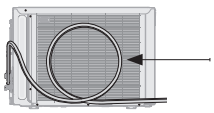

# Installation Procedure

◆ **AJ080TXJ4KG**

**1** Piping outside diameter

| Indoor unit | Out unit | Power supply Ø, V, Hz | Outside diameter | |
|---|---|---|---|---|
| | | | Liquid | Gas |
| AR**F07/09/12*****, AJ016/020/026 /035TN*D*G | AJ080TXJ4KG | 1,220-240, 50 | 1/4" | 3/8" |
| AR**F18*****, AJ052TN*D*G, AJ052BN*D*G | | | | 1/2" |
| AR**F24***** | | | | 5/8" |

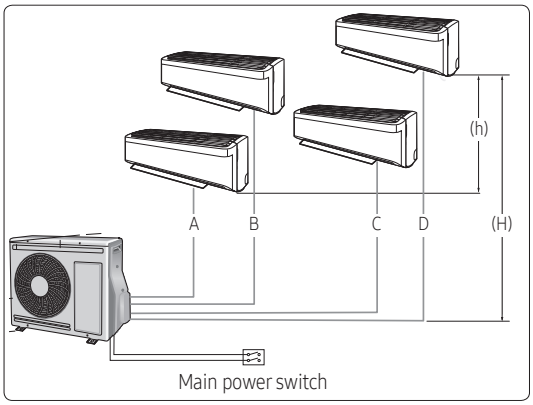


**NOTE**

- AJ080TXJ4KG Outdoor unit cannot be connected to the following indoor unit combination.
  -AJ***TNJDKG

**2** Piping length and the height

| | 1 Room max length | 4 Room total max length | Max height between indoor unit & outdoor unit | Max height between indoor units |
|---|---|---|---|---|
| Dimension | 25m | 70m | 15m | 7.5m |
| Composition | A,B,C,D | A+B+C+D | (H) | (h) |

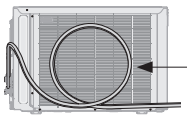

Make at least one round:
It will reduce noise and vibration

- Because your air conditioner contains R-32 refrigerant, make sure that it is installed, operated, and stored it in a room whose floor area is larger than the minimum required floor area specified in the following table:

| Minimum required room area (A,m²) | | | |
|---|---|---|---|
| m (kg) | Ceiling-mounted | Wall-mounted | Floor-standing |
| ≤ 1.842 | No requirement | | |
| 1.843 | 3.64 | 4.45 | 28.9 |
| 1.9 | 3.75 | 4.58 | 30.7 |
| 2.0 | 3.95 | 4.83 | 34.0 |
| 2.2 | 4.34 | 5.31 | 41.2 |
| 2.4 | 4.74 | 5.79 | 49.0 |
| 2.6 | 5.13 | 6.39 | 57.5 |
| 2.8 | 5.53 | 7.41 | 66.7 |
| 3.0 | 5.92 | 8.51 | 76.6 |
| 3.2 | 6.48 | 9.68 | 87.2 |
| 3.4 | 7.32 | 10.9 | 98.4 |
| 3.6 | 8.20 | 12.3 | 110 |
| 3.8 | 9.14 | 13.7 | 123 |
| 4.0 | 10.1 | 15.1 | 136 |
| 4.2 | 11.2 | 16.7 | 150 |
| 4.4 | 12.3 | 18.3 | 165 |
| 4.6 | 13.4 | 20.0 | 180 |
| 4.8 | 14.6 | 21.8 | 196 |
| 5.0 | 15.8 | 23.6 | 213 |

- m : Total refrigerant charge in the system
- A : Minimum required floor area

- IMPORTANT: it's mandatory to consider either the table above or taking into consideration the local law regarding the minimum living space of the premises.
- Minimum installation height of indoor unit is 0.6 m for floor mounted, 1.8 m for wall, 2.2 m for ceiling.

## ⚠ CAUTION

- 3 m as minimum pipe length: It will reduce noise and vibration.
- Tighten the nuts to the specified torques.
  If overtightened, the nuts could be broken so refrigerant may leak.
- Protect or enclose refrigerant tubing to avoid mechanical damage.

NOTE

- The appearance of the unit may be different from the diagram depending on the model.
- You can use the Cool and Heat modes in the following conditions :

| Model | Cool | Heat |
|---|---|---|
| Outdoor temperature | -10 °C to 46 °C | -15 °C to 24 °C |

- It could take maximum 60 minutes to operate for the protection of the compressor,if the outdoor temperature is below -5°C.

## Step 7 Optional: Cutting and flaring the pipes

1 Make sure that you have the required tools available. (pipe cutter, reamer, flaring tool, and pipe holder)

2 If you wish to shorten the pipes, cut it with a pipe cutter, taking care to ensure that the cut edge remains at a 90° angle with the side of the pipe. Refer to the illustrations below for examples of edges cut correctly and incorrectly.

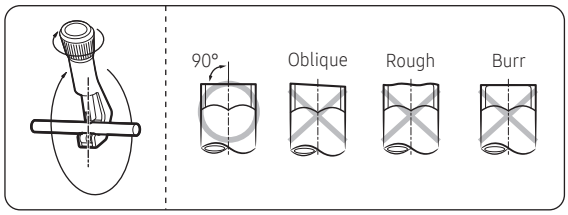


3 To prevent any gas from leaking out, remove all burrs at the cut edge of the pipe, using a reamer.

4 Slide a flare nut on to the pipe and modify the flare.

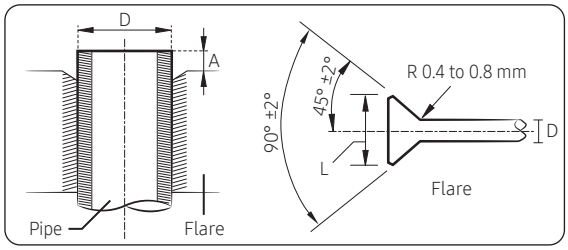


| Outer diameter (D) | Depth (A) | Flare dimension (L) |
|---|---|---|
| ø6.35 mm | 14 to 18 | 8.7 to 9.1 mm |
| ø9.52 mm | 34 to 42 | 12.8 to 13.2 mm |
| ø12.70 mm | 49 to 61 | 16.2 to 16.6 mm |
| ø15.88 mm | 68 to 82 | 19.3 to 19.7 mm |

5 Check that the flaring is correct, referring to the illustrations below for examples of incorrect flaring.

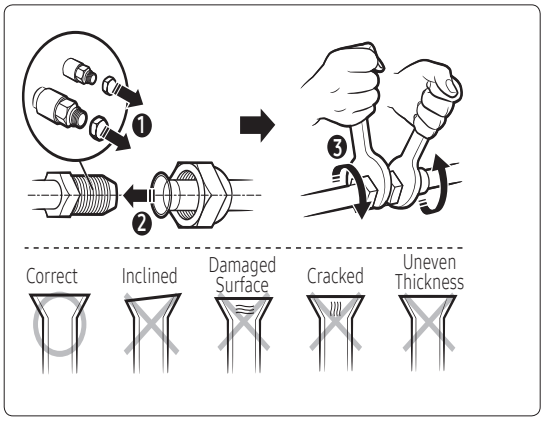


## ⚠ CAUTION

- Keep the piping length at a minimum to minimize the additional refrigerant charge due to piping extension.
- When connecting the pipes, make sure that surrounding objects do not interfere with or contact them to prevent refrigerant leakage due to physical damage.
- Make sure that the spaces where the refrigerant pipes are installed comply with national gas regulations.
- Be sure to perform works such as additional refrigerant charging and pipe welding under the conditions of good ventilation.
- Be sure to perform welding and piping works for mechanical connections under the conditions that the refrigerant does not circulate.
- When reconnecting the pipes, make sure to perform flared-jointing newly to prevent refrigerant leakage.
- When working on the refrigerant pipes and the flexible refrigerant connectors, be careful that they are not damaged physically by surrounding objects.

# Installation Procedure

- For installation with handling the R-32 refrigerant, use the special tools for the R32 refrigerant (manifold gauge, vacuum pump, charging hose, etc.).
- During tests never pressurize the appliances with a pressure higher than the maximum allowable pressure(as indicated on the nameplate of the unit).
- Never directly touch any accidental leaking refrigerant. This could result in severe wounds caused by frostbite.
- Never install a dryer to this unit in order to guarantee its lifetime.
- If the pipes require brazing ensure that OFN(Oxygen Free Nitrogen) is flowing through the system.
- Nitrogen blowing pressure range is 0.02 to 0.05 MPa.
- If you need a pipe longer than specified in piping codes and standards, you must add refrigerant to the pipe. Otherwise, the indoor unit may freeze.
- While removing burrs, put the pipe face down to make sure that the burrs do not get in to the pipe.

## Step 8 Connecting up and removing air in the circuit

### ⚠ WARNING

- When installing, make sure there is no leakage. When recovering the refrigerant, ground the compressor first before removing the connection pipe. If the refrigerant pipe is not properly connected and the compressor works with the service valve open, the pipe inhales the air and it makes the pressure inside of the refrigerant cycle abnormally high. It may cause explosion and injury.

The outdoor unit is loaded with sufficient R-32 refrigerant. Do not vent R-32 into atmosphere: it is a fluorinated greenhouse gas, covered by Kyoto Protocol, with a Global Warming Potential (GWP) = 675.

You should purge the air in the indoor unit and in the pipe. If air remains in the refrigerant pipes, it affects the compressor. It may cause reduction of cooling capacity and malfunction. Refrigerant for air purging is not charged in the outdoor unit. Use Vacuum Pump as seen in the picture.

1 Check the piping connections.

2 Connect the charging hose of low pressure side of manifold gauge to the packed valve having a service port .

| Model Name | Valve | |
|---|---|---|
| | 3/8" | 1/2" |
| AJ040TXJ2KG<br>AJ050TXJ2KG | 2 | - |
| AJ052TXJ3KG | 2 | 1 |
| AJ068TXJ3KG | 1 | 2 |
| AJ080TXJ4KG | 2 | 2 |

- If the valve diameter of indoor and outdoor unit are different, please use Tube-connector.

### ⚠ CAUTION

- Make the electrical connection and leave the system into “stand by mode”. Do not turn on the system! This is necessary for better vacuum operation (full OPEN position of Electronic Expansion Valve - EEV -).

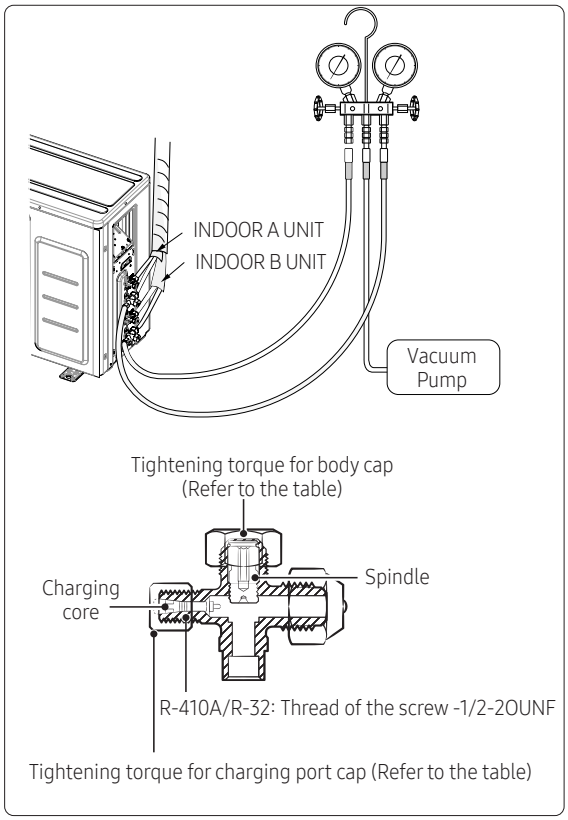

3 Open the valve of the low pressure side of manifold gauge counter clockwise.

4 Purge the air from the system using vacuum pump for about 30 minutes.

- Close the valve of the low pressure side of manifold gauge clockwise.
- Make sure that pressure gauge show -0.1MPa(-76cmHg) after about 1 hour. This procedure is very important in order to avoid gas leak.
- Turn off the vacuum pump.
- Remove the hose of the low pressure side of manifold gauge.

5 Set spindle of both liquid side and gas side of stop valve to the open position.

6 Mount the valve stem nuts and the service port cap to the valve, and tighten them with a torque wrench.

| Outer diameter (mm) | Tightening torque | |
|---|---|---|
| | Body cap (N•m) | Charging port cap (N•m) |
| ø 6.35 | 20 to 25 | 10 to 12 |
| ø 9.52 | 20 to 25 | |
| ø 12.70 | 25 to 30 | |
| ø 15.88 | 30 to 35 | |

## Step 9 Performing the gas leak test

Before completing the installation (insulation of the cables, hose and piping and fixing of the indoor unit to the installation plate), you must check that there are no gas leaks.

| To check for gas leaks on the... | Then, using a leak detector,check the ... |
|---|---|
| Outdoor unit | Valves on sections A and B. |
| Indoor unit | Flare nuts at the end of sections C and D. |

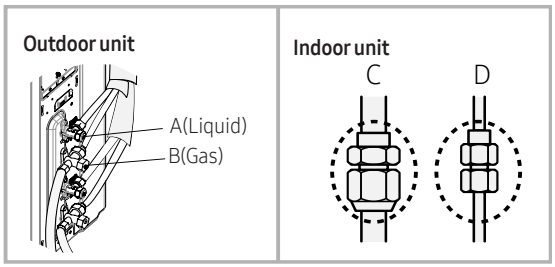


- The designs and shape are subject to change according to the model.

**LEAK TEST WITH NITROGEN (before opening valves)**

In order to detect basic refrigerant leaks, before recreating the vacuum and recirculating the R-32, it is the responsibility of the installer to pressurize the whole system with nitrogen (using a cylinder with pressure reducer) at a pressure above 4 MPa (gauge).

**LEAK TEST WITH R-32 (after opening valves)**

Before opening valves, discharge all the nitrogen into the system and create vacuum. After opening valves check leaks using a leak detector for refrigerant R-32.

Once you have completed all the connections, check for possible leaks using leak detector specifically designed for HFC refrigerants.

# Installation Procedure

## Step 10 Adding refrigerant (R-32)

### Precautions on adding the R-32 refrigerant

In addition to the conventional charging procedure, the following requirements shall be kept.

- Make sure that contamination by other refrigerants does not occur for charging.
- To minimize the amount of refrigerant, keep the hoses and lines as short as possible.
- The cylinders shall be kept upright.
- Make sure that the refrigeration system is earthed before charging.
- Label the system after charging, if necessary.
- Extreme care is required not to overcharge the system.
- Before recharging, the pressure shall be checked with nitrogen blowing.
- After charging, check for leakage before commissioning.
- Be sure to check for leakage before leaving the work area.

### Important information regulation regarding the refrigerant used

This product contains fluorinated greenhouse gases. Do not vent gases into the atmosphere.

## ⚠ CAUTION

- Inform user if system contains 5 $tCO_2e$ or more of fluorinated greenhouse gases. In this case, it has to be checked for leakage at least once every 12 months, according to regulation n°517/2014. This activity has to be covered by qualified personnel only.
- In case situation above (5 $tCO_2e$ or more of R-32), installer (or recognized person which has responsibility for final check) has to provide a maintenance book, with all the information recorded according to REGULATION (EU) No 517/2014 OF THE EUROPEAN PARLIAMENT AND OF THE COUNCIL of 16 April 2014 on fluorinated greenhouse gases.

**Please fill in the following with indelible ink on the refrigerant charge label supplied with this product and on this manual.**

- ①: The factory refrigerant charge of the product.
- ②: The additional refrigerant amount charged in the field.
- ① + ②: The total refrigerant charge.

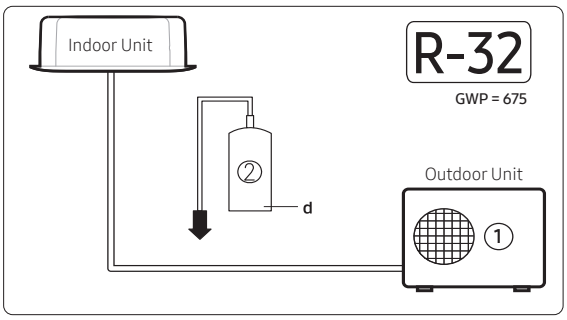


| Unit | kg | $tCO_2e$ |
|---|---|---|
| ①, a | | |
| ②, b | | |
| ① + ②, c | | |

| Refrigerant type | GWP value |
|---|---|
| R-32 | 675 |

- GWP: Global Warming Potential
- Calculating $tCO_2e$ : kg x GWP / 1000

**NOTE**

**a** Factory refrigerant charge of the product: see unit name plate

**b** Additional refrigerant amount charged in the field(Refer to the above information for the quantity of refrigerant replenishment.)

**c** Total refrigerant charge

**d** Refrigerant cylinder and manifold for charging

### Calculating the quantity of refrigerant to add

The quantity of additional refrigerant is variable according to the installation situation. Thus, make sure the outdoor unit situation before adding refrigerant.

If you install the excessive length of pipe, add additional refrigerant as 10g or 20g per unit meter ; refer to the table below.

Refer to the Service Manual for more details on this operation.

| Model | Total connecting pipe length (L) | Adding refrigerant |
|---|---|---|
| AJ040TXJ2KG<br>AJ050TXJ2KG | LT≤30m | **Chargeless** |
| AJ052TXJ3KG<br>AJ068TXJ3KG | LT≤30m | **Chargeless** |
| | LT≥30m | **(LT-30m)x10g** |
| AJ080TXJ4KG | LT≤30m | **Chargeless** |
| | LT≥30m | **(LT-30m)x20g** |

## ⚠ CAUTION

- The filled-out label must be adhered in the proximity of the product charging port (e.g. onto the inside of the stop valve cover).
- Make sure that the total refrigerant charge does not exceed (**A**), the maximum refrigerant charge, which is calculated in the following formula: Maximum refrigerant charge (**A**)= factory refrigerant charge (**B**) + maximum additional refrigerant charge due to piping extension (**C**).
- Here below, the summary table with refrigerant charge limits for each products.

(Unit:g)

| Model | A | B | C |
|---|---|---|---|
| AJ040TXJ2KG/EU | 980 | 980 | 0 |
| AJ050TXJ2KG/EU | 1180 | 1180 | 0 |
| AJ052TXJ3KG/EU | 1750 | 1550 | 200 |
| AJ068TXJ3KG/EU | 2200 | 2000 | 200 |
| AJ080TXJ4KG/EU | 2800 | 2000 | 800 |

## Step 11 Connecting the drain hose to the outdoor unit

When heating, ice may accumulate. During the process of defrosting, check if condensation draining is adequate.

For adequate draining, do the following :

1 Insert the drain plug into the drain hole on the underside of the outdoor unit.

2 Connect the drain hose to the drain plug.

3 Ensure that condensation draining is adequate.

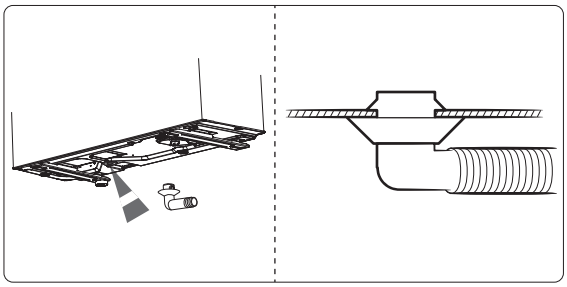

4 Be sure to plug the rest of drain holes not connected with drain plugs using drain caps.

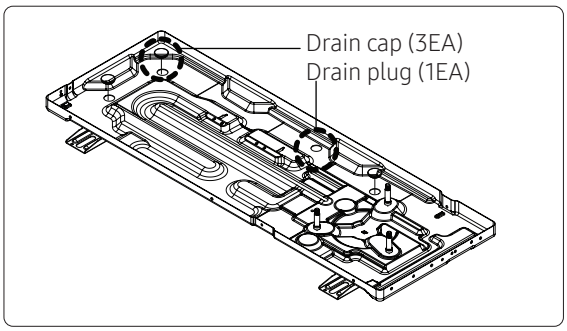


- When installing the product, make sure that the rack is not placed under the drain hole.
- If the product is installed in a region of heavy snow, allow enough separation distance between the product and the ground.

# Installation Procedure

## Step 12 Checking the earthing

If the power distribution circuit does not have a earthing or the earthing does not comply with specifications, an earthing electrode must be installed. The corresponding accessories are not supplied with the air conditioner.

1 Select an earthing electrode that complies with the specifications given in the illustration.

2 Connect the flexible hose to the flexible hose port.
- In damp hard soil rather than loose sandy or gravel soil that has a higher earthing resistance.
- Away from underground structures or facilities, such as gas pipes, water pipes, telephone lines and underground cables.
- At least two metres away from a lightening conductor earthing electrode and its cable.

**NOTE**

- The earthing wire for the telephone line cannot be used to ground the air conditioner.

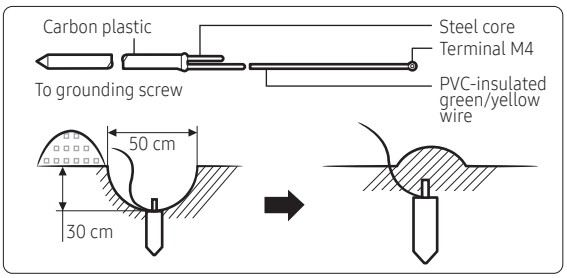


3 Finish wrapping insulating tape around the rest of the pipes leading to the outdoor unit.

4 Install a green/yellow coloured earthing wire:
- If the earthing wire is too short, connect an extension lead in a mechanic al way and wrap it with insulating tape (do not bury the connection).
- Secure the earthing wire in position with staples.

**NOTE**

- If the earthing electrode is installed in an area with heavy traffic, its wire must be connected securely.

5 Carefully check the installation by measuring the earthing resistance with a earth resistance tester. If the resistance is above the required level, drive the electrode deeper into the ground or increase the number of earthing electrodes.

6 Connect the earthing wire to the electrical component box inside of the outdoor unit.

## Step 13 Setting an indoor unit address and installation option

### Setting the indoor unit addresses manually

1 Review all the following elements in the installation:
- Installation site strength
- Piping connection tightness to detect any gas leakage
- Connection wiring
- Heat-resistant insulation of the piping
- Drainage
- Earthing wire connection

2 Manually set options in each room's the indoor unit by referring to page 30~35.

3 Press the K3 button once or reset the outdoor unit.

**NOTE**

- The Display 1/2 indications are the same as in the automatic address setting mode.

### Setting of Key and Display of the outdoor unit

- Key option of the outdoor unit

  - K1: Fuction button - K3: Reset button

| Key / Push | K1 | K3 |
|---|---|---|
| 1 | Pipe Checking Operation | Reset |
| 2 | Cool Mode Try run | |
| 3 | Heat Mode Try run | |
| 4 | Pump Down | |
| 5 | Finish Key Operation | |

※ For more information of the Cool or Heat Try run test, refer to page 39.

- K4 View mode Display changes

| Push | Display Explanation | Push | Display Explanation |
|---|---|---|---|
| 1 | Present Compressor Frequency | 9 | Discharge temperature |
| 2 | Target Compressor Frequency | 10 | OLP temperature |
| 3 | EEV0 current step | 11 | Condenser temperature |
| 4 | EEV1 current step | 12 | Outdoor temperature |
| 5 | EEV2 current step | 13 | Running current |
| 6 | EEV3 current step | 14 | Target Discharge temperature |
| 7 | EEV4 current step | 15 | Total capacity of the indoor units |
| 8 | Fan RPM (H: high, L: low, Blank: off ) | 16 | Safety Control (just For Service Technician) |

PCB MAIN - OUT

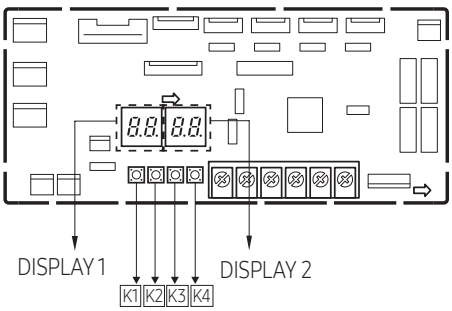

# Installation Procedure



## Setting the outdoor option

- Press and hold K2 to enter the option setting.
  (Only available when the operation is stopped)
  – If you enter the option setting, display will show the following.

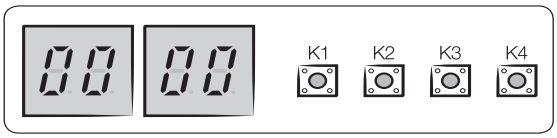


  – Seg 1 and Seg 2 will display the number for selected option.
  – Seg 3 and Seg 4 will display the number for set value of the selected option.
- If you have selected desired option, you can shortly press the K1 switch to adjust the value of the Seg 1, Seg 2 and change the function for the selected option.

Example)

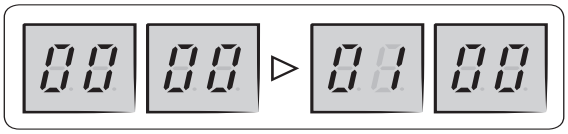

- If you have selected desired option, you can shortly press the K2 switch to adjust the value of the Seg 3, Seg 4 and change the function for the selected option.

Example)

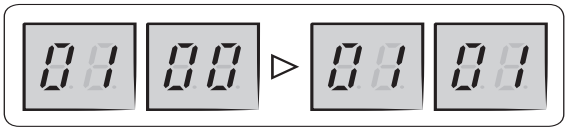

- After selecting the function for options, press and hold the K2 switch for 2 seconds. Edited value of the option will be saved when entire segments blinks and tracking mode begins.

## ⚠ CAUTION

- Edited option will not be saved if you do not end the option setting as explained in above instruction.

※ While you are setting the option, you may press and hold the K1 button to reset the value to previous setting.

※ If you want to restore the setting to factory default, press and hold the K4 button while you are in the option setting mode.
  – If you press and hold the K4 button, setting will be restored to factory default but it doesn't mean that restored setting is saved. Press and hold the K2 button. When the segments shows that tracking mode is in progress, setting will be saved.

| Option item | Input unit | SEG1 | SEG2 | SEG3 | SEG4 | Function |
|---|---|---|---|---|---|---|
| Setting to Cool or Heat only mode | Main | 0 | 0 | 0 | 0 | Cooling andHeating (Factory default) |
| | | | | 0 | 1 | Only Cooling |
| | | | | 0 | 2 | Only Heating |
| Power improvement mode | Main | 0 | 1 | 0 | 0 | Disabled (Factory default) |
| | | | | 0 | 1 | Enabled |

## Setting Option

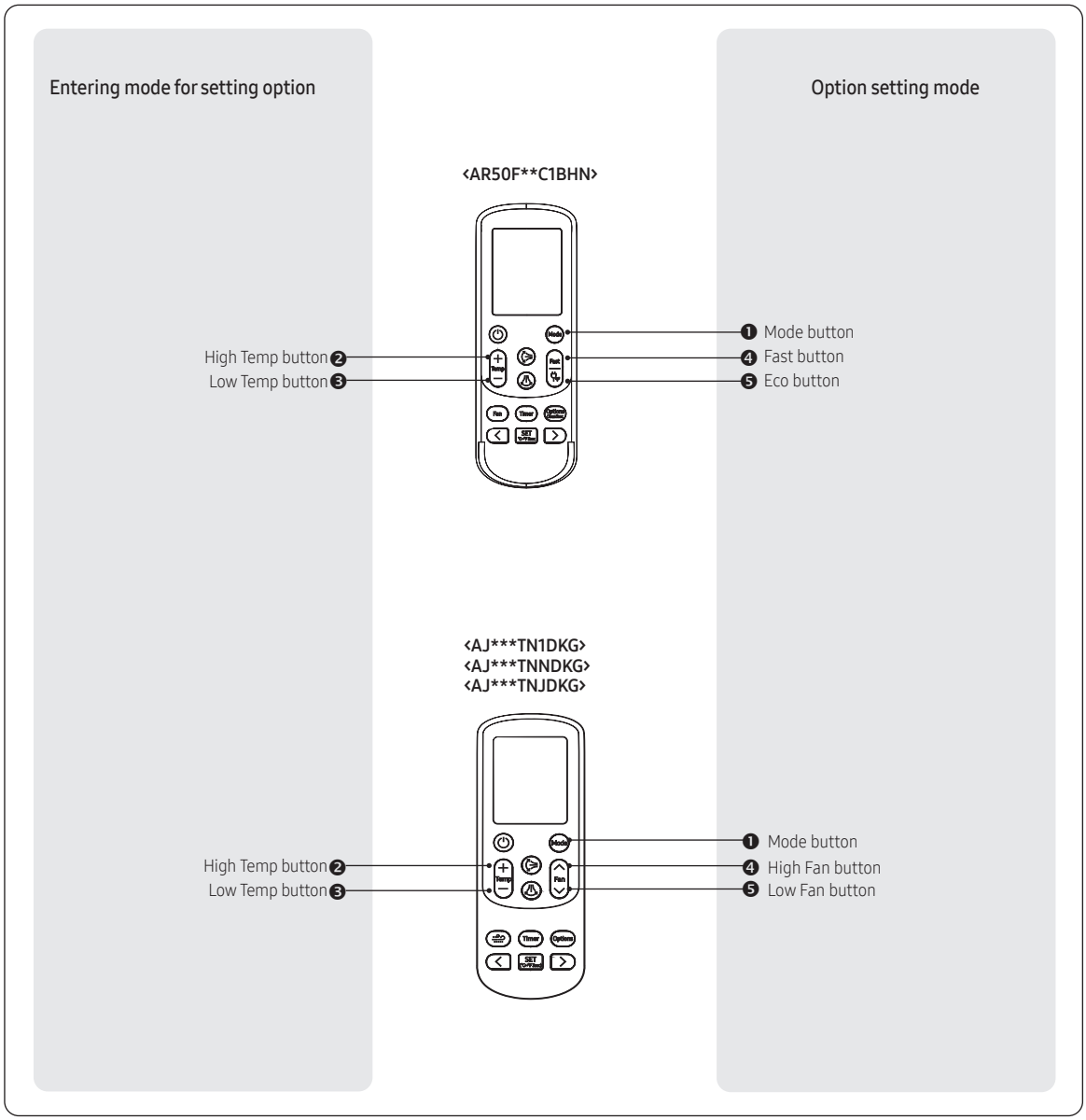

# Installation Procedure



### Setting Option

1 Remove batteries from the remote controller
2 Insert batteries and enter the option setting mode while pressing ❷ button and ❸ button.
3 Each time you press ❺ button, 7-seg on left side is increased by "1" and each time you press ❹ button, 7-seg on right side is increased by "1"
4 You press ❶ button to move to the next setteing page.
5 After setting option, press ❶ button to check whether the option code you input is correct or not.

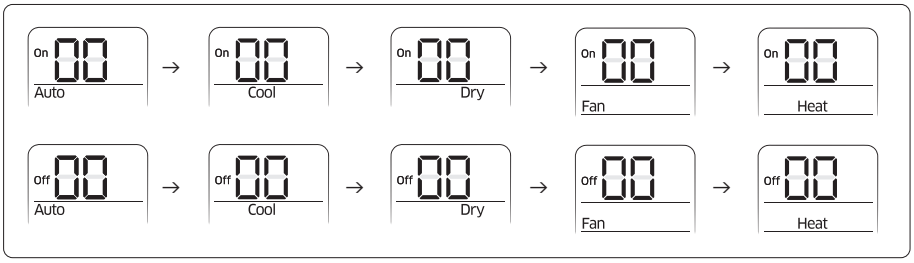


6 Press operation button ⏻ with the direction of remote control for set.

## ⚠ CAUTION

- SEG1, SEG7, SEG13, SEG19 are not set as page option.
- Set the SEG1, SEG7 as ON status and SEG13, SEG19 as OFF status.
  - Set the each option separately since you cannot set the ADDRESS setting and indoor unit installation setting option at the same time.

### The procedure of setting option

| Operation | Indication |
|---|---|
| **Step 1**<br>1 Remove the batteries from the remote controller.<br>2 Insert batteries while pressing ❷ Button and ❸ Button. | |
| **Step 2**<br>1 Press ❺ button to enter SEG2 value.<br>2 Press ❹ button to enter SEG3 value. | |
| **Step 3**<br>Press ❶ button to be change to Cool mode in the ON status.<br>1 Press ❺ button to enter SEG4 value.<br>2 Press ❹ button to enter SEG5 value. | 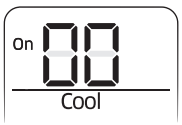 |

| Operation | Indication |
|---|---|
| **Step 4**<br>Press ❶ button to be changed to DRY mode in the ON status.<br>1 Press ❺ button to enter SEG6.<br>2 Press ❹ button to enter SEG8. | On 00 Dry |
| **Step 5**<br>Press ❶ button to be changed to FAN mode in the ON status.<br>1 Press ❺ button to enter SEG9 value.<br>2 Press ❹ button to enter SEG10 value. | On 00 Fan |
| **Step 6**<br>Press ❶ button to be changed to HEAT mode in the ON status.<br>1 Press ❺ button to enter SEG11 value.<br>2 Press ❹ button to enter SEG12value | On 00 Heat |
| **Step 7**<br>Press ❶ button to be changed to AUTO mode in the OFF status.<br>1 Press ❺ button to enter SEG14 value.<br>2 Press ❹ button to enter SEG15 value. | Off 00 Auto |
| **Step 8**<br>Press ❶ button to be changed to Cool mode in the OFF status.<br>1 Press ❺ button to enter SEG16 value.<br>2 Press ❹ button to enter SEG17 value. | Off 00 Cool |
| **Step 9**<br>Press ❶ button to be changed to DRY mode in the OFF status.<br>1 Press ❺ button to enter SEG18 value.<br>2 Press ❹ button to enter SEG20 value. | Off 00 Dry |
| **Step 10**<br>Press ❶ button to be changed to FAN mode in OFF status<br>1 Press ❺ button to enter SEG21 value.<br>2 Press ❹ button to enter SEG22 value. | Off 00 Fan |
| **Step 11**<br>Press ❶ button to be changed to HEAT mode in the OFF status<br>1 Press ❺ button to enter SEG23 value.<br>2 Press ❹ button to enter SEG24 value. | Off 00 Heat |
| **Step 12**<br>Press ❶ button to check whether the option code you entered is correct or not.<br>Press operation button ⏻ to enter option. | |

# Installation Procedure

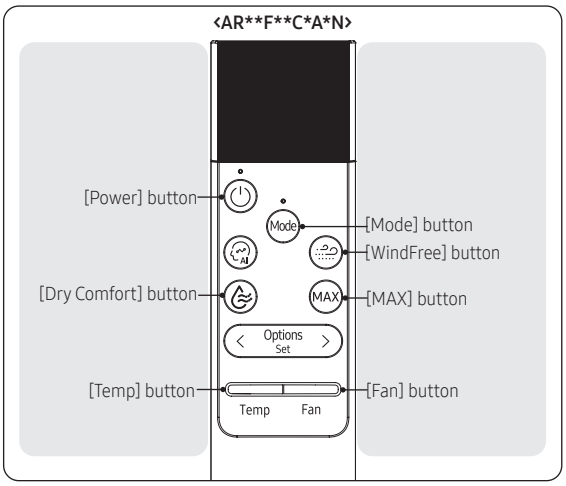


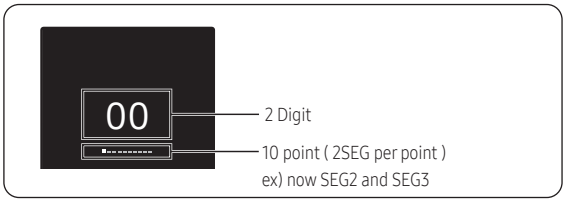


**NOTE**

- The remote control display and buttons may vary depending on the model.

1 Enter the mode for setting the options.

  a Reset remote control : [Temp] button Down + [Fan] button Down + [Mode] Press for 10 seconds.

  b You can see the "Initial Settings" message and enter the following in 5 seconds.

  c Press [WindFree] button and [MAX] button for 5 seconds.

  d Make sure that you are entered into the mode for setting options:

2 Set the option values.

## ⚠ CAUTION

- The total number of available options is 24 : SEG1 to SEG24.
- Because SEG1, SEG7, SEG13, and SEG19 are the page options used by the previous remote control models, the modes to set values for these options are skipped automatically.
- You can see 20 SEG ( except SEG1, SEG7, SEG13, SEG19 SEG2 → ...→ SEG6 → SEG8 → .....→ SEG12 → SEG 14 → .... → SEG 18 → SEG20 → ... → SEG 24

| SEG1 | SEG2 | SEG3 | SEG4 | SEG5 | SEG6 |
|---|---|---|---|---|---|
| 0 | X | X | X | X | X |
| **SEG7** | **SEG8** | **SEG9** | **SEG10** | **SEG11** | **SEG12** |
| 1 | X | X | X | X | X |
| **SEG13** | **SEG14** | **SEG15** | **SEG16** | **SEG17** | **SEG18** |
| 2 | X | X | X | X | X |
| **SEG19** | **SEG20** | **SEG21** | **SEG22** | **SEG23** | **SEG24** |
| 3 | X | X | X | X | X |

- You can set the next SEG by pressing the mode button.
- You can change the digit value through the following operation.
  Left value : Temp up or down, range : 0 ~ F
  Right value : Fan up or down, range : 0 ~ F

Take the steps presented in the following table:

| Steps | Remote control display |
|---|---|
| 1 Set the SEG2 and SEG3 values:<br>a Set the SEG2 value by pressing the Temp button repeatedly until the value you want to set appears on the remote control display.<br>b Set the SEG3 value by pressing the Fan button repeatedly until the value you want to set appears on the remote control display.<br>When you press the Fan or Temp button, values appear in the following order: 0 → 1 → ··· E → F | 00 SEG2<br>00 SEG3 |

| Steps | Remote control display |
|---|---|
| **2** Press the (Mode) button to move to the next page. | 00 |
| **3** Set the SEG4 and SEG5 values:<br>**a** Set the SEG4 value by pressing the (Temp) button repeatedly until the value you want to set appears on the remote control display.<br>**b** Set the SEG5 value by pressing the (Fan) button repeatedly until the value you want to set appears on the remote control display.<br>When you press the (Fan) or (Temp) button, values appear in the following order: 0 → 1 → ··· E → F | 00 SEG4<br>00 SEG5 |
| **4** Press the (Mode) button to move to the next page. | 00 |
| **5** Set the SEG6 and SEG8 values:<br>**a** Set the SEG6 value by pressing the (Temp) button repeatedly until the value you want to set appears on the remote control display.<br>**b** Set the SEG8 value by pressing the (Fan) button repeatedly until the value you want to set appears on the remote control display.<br>When you press the (Fan) or (Temp) button, values appear in the following order: 0 → 1 → ··· E → F | 00 SEG6<br>00 SEG8 |
| **6** Press the (Mode) button to move to the next page. | 00 |
| **7** Set the SEG9 and SEG10 values:<br>**a** Set the SEG9 value by pressing the (Temp) button repeatedly until the value you want to set appears on the remote control display.<br>**b** Set the SEG10 value by pressing the (Fan) button repeatedly until the value you want to set appears on the remote control display.<br>When you press the (Fan) or (Temp) button, values appear in the following order: 0 → 1 → ··· E → F | 00 SEG9<br>00 SEG10 |
| **8** Press the (Mode) button to move to the next page. | 00 |

# Installation Procedure

| Steps | Remote control display |
|---|---|
| **9** Set the SEG11 and SEG12 values:<br>**a** Set the SEG11 value by pressing the Temp button repeatedly until the value you want to set appears on the remote control display.<br>**b** Set the SEG12 value by pressing the Fan button repeatedly until the value you want to set appears on the remote control display.<br>When you press the Fan or Temp button, values appear in the following order: 0 → 1 → ··· E → F | 00 SEG11<br>00 SEG12 |
| **10** Press the Mode button to move to the next page. | 00 |
| **11** Set the SEG14 and SEG15 values:<br>**a** Set the SEG14 value by pressing the Temp button repeatedly until the value you want to set appears on the remote control display.<br>**b** Set the SEG15 value by pressing the Fan button repeatedly until the value you want to set appears on the remote control display.<br>When you press the Fan or Temp button, values appear in the following order: 0 → 1 → ··· E → F | 00 SEG14<br>00 SEG15 |
| **12** Press the Mode button to move to the next page. | 00 |
| **13** Set the SEG16 and SEG17 values:<br>**a** Set the SEG16 value by pressing the Temp button repeatedly until the value you want to set appears on the remote control display.<br>**b** Set the SEG17 value by pressing the Fan button repeatedly until the value you want to set appears on the remote control display.<br>When you press the Fan or Temp button, values appear in the following order: 0 → 1 → ··· E → F | 00 SEG16<br>00 SEG17 |
| **14** Press the Mode button to move to the next page. | 00 |
| **15** Set the SEG18 and SEG20 values:<br>**a** Set the SEG18 value by pressing the Temp button repeatedly until the value you want to set appears on the remote control display.<br>**b** Set the SEG20 value by pressing the Fan button repeatedly until the value you want to set appears on the remote control display.<br>When you press the Fan or Temp button, values appear in the following order: 0 → 1 → ··· E → F | 00 SEG18<br>00 SEG20 |

| Steps | Remote control display |
|---|---|
| **16** Press the (Mode) button to move to the next page. | 00 |
| **17** Set the SEG21 and SEG22 values:<br>**a** Set the SEG21 value by pressing the (Temp) button repeatedly until the value you want to set appears on the remote control display.<br>**b** Set the SEG22 value by pressing the (Fan) button repeatedly until the value you want to set appears on the remote control display.<br>When you press the (Fan) or (Temp) button, values appear in the following order: 0 → 1 → ··· E → F | 00 SEG21<br>00 SEG22 |
| **18** Press the (Mode) button to move to the next page. | 00 |
| **19** Set the SEG23 and SEG24 values:<br>**a** Set the SEG23 value by pressing the (Temp) button repeatedly until the value you want to set appears on the remote control display.<br>**b** Set the SEG24 value by pressing the (Fan) button repeatedly until the value you want to set appears on the remote control display.<br>When you press the (Fan) or (Temp) button, values appear in the following order: 0 → 1 → ··· E → F | 00 SEG23<br>00 SEG24 |

**3** Check whether the option values you have set are correct by pressing the (Mode) button repeatedly.

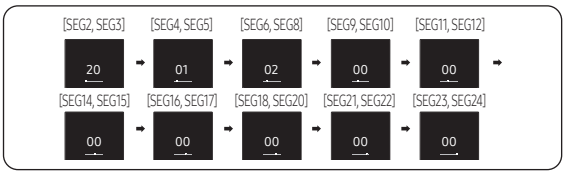


**4** Save the option values into the indoor unit:
Point the remote control to the remote control sensor on the indoor unit and then press the (⏻) button on the remote control twice.
Make sure that this command is received by the indoor unit. When it is successfully received, you can hear a short sound from the indoor unit. If the command is not received, press the (⏻) button again.

**5** Check whether the air conditioner operates following the option values you have set:

**a** Reset the indoor or outdoor unit.
- Indoor Unit : Press (Options) button + (Reset) button for 5 seconds
- Outdoor Unit: Press the K3 button

**b** Reset remote control: (Temp) button Down + (Fan) button Down + (Mode) Press for 10 seconds
You can see the "Initial Settings" message.

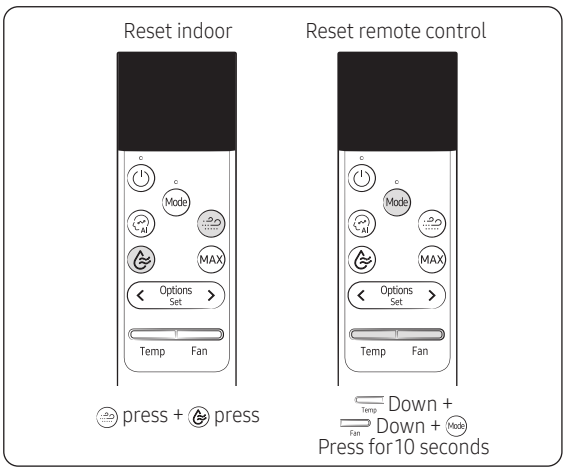

# Installation Procedure

## Setting the indoor unit addresses automatically

**NOTE**

- For the best results, make sure that electrical wiring is done properly.
- For the best results, set the outdoor temperature to 5 to 40 °C (*) and set the indoor temperature to 16 °C or higher (*).

※ (*) Auto addressing may fail when the temperature is out of the range above. In this case, set the address manually.

**⚠ CAUTION**

- This product is prohibited one indoor unit installation. Don't use pipe checking operation and auto addressing mode when one indoor unit is installed.

PCB MAIN - OUT

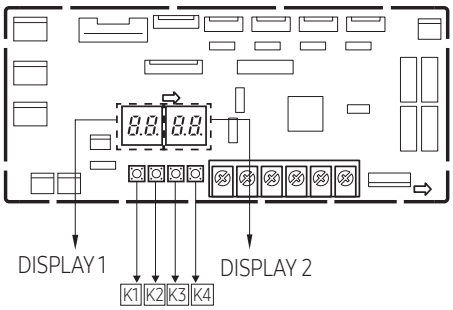


1 Turn on the outdoor unit, and then check whether the display 1/2 indications are displayed "E199" code.

※ During the initial , display 1 shows "Ad" and display 2 shows the connected indoor number.

- If different display code is shown, see Troubleshooting on page 43 and take corrective actions.

2 Push once the K1 button.

3 After the operations described above have been performed, the system starts in Cooling or Heating mode, depending on the external ambient temperature. After a few minutes (from a minimum of 3 to 5 minutes for the internal unit), the system stops automatically, completing the self-test and addressing procedure."t lot" appears on the display of the outdoor unit.

4 20 seconds after the display of "t lot " (that confirms the correct execution of the procedure), the following codes (if four internal units are connected) display in sequence on the display of the outdoor unit:

| Display1 | Display2 | Description |
|---|---|---|
| 00 | 00 | The outdoor unit is communicating correctly with the indoor unit connected to refrigerant pipe A. |
| 01 | 00 | The outdoor unit is communicating correctly with the indoor unit connected to refrigerant pipe B. |
| 02 | 00 | The outdoor unit is communicating correctly with the indoor unit connected to refrigerant pipe C. |
| 03 | 00 | The outdoor unit is communicating correctly with the indoor unit connected to refrigerant pipe D. |
| 04 | 00 | The outdoor unit is communicating correctly with the indoor unit connected to refrigerant pipe E. |

**NOTE**

- At this point it is possible to start the internal units in the desired mode.

※ If "t lot "doesn't display, the procedure has failed and it is therefore necessary to read ALL the operator's manual before repeating the operating described in steps 1-2-3-4.

## Setting an indoor unit address (MAIN/RMC)

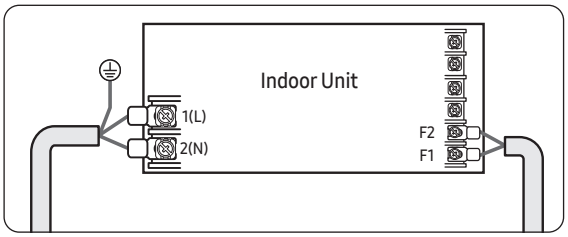


1 Check whether power is supplied or not.
   - When the indoor unit is not plugged in, there should be additional power supply in the indoor unit.

2 The panel(display ) should be connected to an indoor unit to receive option.

3 Before installing the indoor unit, assign an address to the indoor unit according to the air conditioning system plan.

4 Assign an indoor unit address by wireless remote controller.
   - The initial setting status of indoor unit ADDRESS(MAIN/RMC) is "0A0000-100000-200000-300000"
   - There is no need to assign extra ADDRESS for 1:1 installation between indoor unit and outdoor unit.

Option No. : 0AXXXX-1XXXXX-2XXXXX-3XXXXX

| Option | SEG1 | | SEG2 | | SEG3 | | SEG4 | | SEG5 | | SEG6 | |
|---|---|---|---|---|---|---|---|---|---|---|---|---|
| Explanation | Page | | Mode | | Setting main address | | 100-digit of indoor unit address | | 10-digit of indoor unit | | A single digit of indoor unit | |
| Indication and details | Indication | Details | Indication | Details | Indication | Details | Indication | Details | Indication | Details | Indication | Details |
| | 0 | | A | | 0 | No Main address | 0~9 | 100-digit | 0~9 | 10-digit | 0~9 | A single digit |
| | | | | | 1 | Main address setting mode | | | | | | |

| Option | SEG7 | | SEG8 | | SEG9 | | SEG10 | | SEG11 | | SEG12 | |
|---|---|---|---|---|---|---|---|---|---|---|---|---|
| Explanation | PAGE | | | | Setting RMC address | | | | Group channel(*16) | | Group address | |
| Indication and Details | Indication | Details | Indication | Details | Indication | Details | Indication | Details | Indication | Details | Indication | Details |
| | 1 | | | | 0 | No RMC address | | | RMC1 | 1~F | RMC2 | 1~F |
| | | | | | 1 | RMC address setting mode | | | | | | |

* You must set RMC address setting mode when using the centralized Control.

## ⚠ CAUTION

- When “A”~”F” is entered to SEG4~6, the indoor unit MAIN ADDRESS is not changed.
- If you set the SEG 3 as 0, the indoor unit will maintain the previous MAIN ADDRESS even if you input the option value of SEG4~6.
- If you set the SEG 9 as 0, the indoor unit will maintain previous RMC ADDRESS even if you input the option value of SEG11~12.

5 The MAIN address is for commnication between the indoor unit and the outdoor unit. Therefore, you must set it to operate the air conditioner properly

# Installation Procedure

## Setting an indoor unit installation option (suitable for the condition of each installation location)

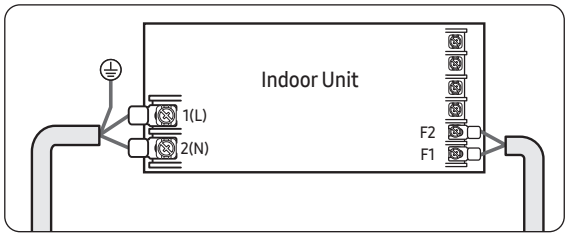


1 Check whether power is supplied or not.
   - When the indoor unit is not plugged in, there should be additional power supply in the indoor unit.

2 The panel(display ) should be connected to an indoor unit to receive option.

3 Before installing the indoor unit, assign an option to the indoor unit according to the air conditioning system plan.
   - The default setting of an indoor unit installation option is “02000-100000-200000-300000”.
   - Individual control of a remote controller(SEG20) is The function that controls an indoor unit individually when there is more than one indoor unit.

4 Set the indoor unit option by wireless remote controller.
   - When entering Address option, connect remote controller receiver.

| Option | SEG1 | | SEG2 | | SEG3 | | SEG4 | | SEG5 | | SEG6 | |
|---|---|---|---|---|---|---|---|---|---|---|---|---|
| Explanation | PAGE | | MODE | | | | | | Central control | | | |
| Indication and Details | Indication | Details | Indication | Details | Indication | Details | Indication | Details | Indication | Details | Indication | Details |
| | 0 | | 2 | | 0 | | 0 | | 0 | No use | 0 | |
| | | | | | | | | | 1 | Use | | |
| Option | SEG7 | | SEG8 | | SEG9 | | SEG10 | | SEG11 | | SEG12 | |
| Explanation | PAGE | | | | | | | | | | Master / Slave | |
| Indication and Details | Indication | Details | Indication | Details | Indication | Details | Indication | Details | Indication | Details | Indication | Details |
| | 1 | | 0 | | 0 | | 0 | | 0 | | 0 | Slave |
| | | | | | | | | | | | 1 | Master |
| Option | SEG13 | | SEG14 | | SEG15 | | SEG16 | | SEG17 | | SEG18 | |
| Explanation | PAGE | | External control | | External control output | | | | Buzzer | | | |
| Indication and Details | Indication | Details | Indication | Details | Indication | Details | Indication | Details | Indication | Details | Indication | Details |
| | 2 | | 0 | No use | 0 | Thermo ON | 0 | | 0 | Use | 0 | |
| | | | 1 | On/Off control | | | | | | | | |
| | | | 2 | Off control | 1 | Operation ON | | | 1 | No Use | | |
| | | | 3 | Window On/Off control1) | | | | | | | | |
| Option | SEG19 | | SEG20 | | SEG21 | | SEG22 | | SEG23 | | SEG24 | |
| Explanation | PAGE | | | | | | | | | | | |
| Indication and Details | Indication | Details | Indication | Details | Indication | Details | Indication | Details | Indication | Details | Indication | Details |
| | 3 | | 0 | | 0 | | 0 | | 0 | | 0 | |

* If you input a number other than 0~4 of the individual control of the indoor unit(SEG20), the indoor is set as “indoor 1”.

- The window on/off function applies to the following unit
  - AR**F*******/AJ***TN1DKG/AJ***TNNDKG
  
  ※ AR**F15***** unit cannot be connected to FJM outdoor unit.

## Step 14 Cool and Heat modes operation test

After installing the outdoor and indoor units, test the **Cool** and **Heat** modes.

- When you test the **Cool** mode, set the set temperature of the indoor unit to the lowest one. And when you test the **Heat** mode, set the set temperature of the indoor unit to the highest one.
- Check if each indoor unit operates normally and then also check if all indoor units operate normally together.
  - Check both of the Cool and Heat modes.
- About 20 minutes after the air conditioner is started, check the temperature difference between the air inlet and outlet of the indoor unit. If the temperature difference is larger than the value given in the following table, the operation is normal.

| Mode | Temperature |
|---|---|
| Cool | Approximately 8 °C |
| Heat | Approximately 12 °C |

### ⚠ CAUTION

- If the outdoor unit is turned off and then immediately turned on again, the compressor does not operate for about 3 minutes.
- During the Cool mode, frost may temporarily develop on valves and other parts.

### NOTE

- You can also test the Cool or Heat Try run using K1 button.
  - Cool mode try-run : Push the [K1] button twice.
  - Heat mode try-run : Push the [K1] button three times.

## Step 15 Optional: Setting to Cool or Heat only mode

This function enables the indoor units connected to the outdoor unit to operate in a specific mode.

You can set each mode with Keys on the Main PCB in the outdoor unit.

| Set mode | SEG1 | SEG2 | SEG3 | SEG4 |
|---|---|---|---|---|
| Cooling and Heating | 0 | 0 | 0 | 0 |
| Only Cooling | | | 0 | 1 |
| Only Heating | | | 0 | 2 |

- Default value: Cooling and Heating mode

## Step 16 Optional: Power improvement mode

The power improvement mode has the following power reduction effects.

- Reduced power at Thermo off
  - When the air conditioner operates in **Cool**, **Dry** and **Auto** mode, if Thermo off is reached during cooling, the fan and display of the indoor unit are turned off after 5 minutes.
  - When you operates the remote control, the indoor unit display turns on again.
- Standby mode operation
  - When all indoor units are turned off, the air conditioner recognizes it and enters the standby mode.
  - The product power consumption in the standby mode is 3.5 W or less.

### Setting the power improvement mode

Enable or disable the power improvement mode with Keys on the Main PCB in the outdoor unit.

| Power improvement mode | SEG1 | SEG2 | SEG3 | SEG4 |
|---|---|---|---|---|
| Disabled | 0 | 1 | 0 | 0 |
| Enabled | | | 0 | 1 |

- Default value: Disabled

# Extra Procedures

## Pumping down refrigerant

### ⚠ WARNING

- After installing the product, be sure to perform leak tests on the piping connections. After pumping down refrigerant to inspect or relocate the outdoor unit, be sure to stop the compressor and then remove the connected pipes.
  - Do not operate the compressor while a valve is open due to refrigerant leakage from a pipe or an unconnected or incorrectly connected pipe. Failure to do so may cause air to flow into the compressor and too a high pressure to develop inside the refrigerant circuit, leading to an explosion or product malfunction.

Pump-down is an operation intended to collect all the system refrigerant in the outdoor unit.

This operation must be carried out before disconnecting the refrigerant pipe in order to avoid refrigerant loss to the atmosphere.

1 Turn the system on in cooling with fan operating at high velocity and then let the compressor run for more than 5 minutes. (Compressor will immediately start, provided 3 minutes have elapsed since the last stop.)
2 Release the valve caps on High and Low pressure side.
3 Use L-wrench to close the valve on the high pressure side.
4 After approximately 2 minute, close the valve on the low pressure side.
5 Stop operation of the air conditioner by pressing the (Power) button on the indoor unit or remote control.
6 Disconnect the pipes.

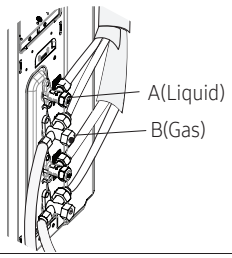


## Relocating the indoor and outdoor units

1 Pump down refrigerant. See **Pumping down refrigerant** on page 41.
2 Remove the power cord.
3 Disconnect the assembly cable from the indoor and outdoor units.
4 Remove the flare nuts connecting the indoor units and the pipes. At this time, cover the pipes of the indoor unit and the other pipes using a cap or vinyl plug to avoid foreign material entering.
5 Disconnect the pipes connected to the outdoor units. At this time, cover the valve of the outdoor units and the other pipes using a cap or vinyl plug to avoid foreign material entering.

   Note: Make sure you do not bend the connection pipes in the middle and store together with the cables.
6 Move the indoor and outdoor units to a new location.
7 Remove the mounting plate for the indoor unit and move it to a new location.

### NOTE

- Before relocating the units, be sure to thoroughly read **Recovery** on page 6.
- When recharging R-32 refrigerant after it has been completely removed, be sure to charge only the factory refrigerant amount.
- When vacuuming the product, be sure to proceed for at least 1 hour.
- Be sure to use an electronic balance when measuring the amount of refrigerant, and make sure that only the specified amount is charged.

### ⚠ CAUTION

- If more than the amount of refrigerant specified on the label is charged, a fire may occur when the refrigerant leaks.

# Extra Procedures

## Using the stop valve

### Opening the stop valve

1 Open the cap and turn the stop valve anticlockwise by using a hexagonal wrench.

2 Turn it until the axis is stopped.

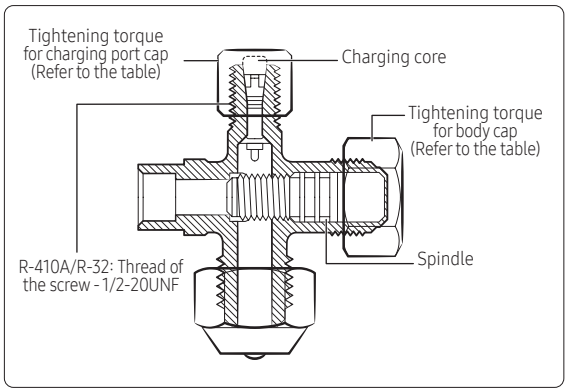


3 Tighten the cap securely.

| Outer Diameter (mm) | Tightening torque | |
|---|---|---|
| | Body cap (N•m) | Charging port cap (N•m) |
| Ø6.35 | 20 to 25 | 10 to 12 |
| Ø9.52 | 20 to 25 | |
| Ø12.70 | 25 to 30 | |
| Ø15.88 | 30 to 35 | |

(1 N•m=10 kgf•cm)

**NOTE**

- Do not apply excessive force to the stop valve and always use special instruments. Otherwise, the stopping box can be damaged and the back sheet can leaks.
- If the watertight sheet leaks, turn the axis back by half, tighten the stopping box, then check the leakage again. If there is no leakage any more, tighten the axis entirely.

### Closing the stop valve

1 Remove the cap.

2 Turn the stop valve clockwise by using a hexagonal wrench.

3 Tighten the axis until the valve reached the sealing point.

4 Tighten the cap securely.

**⚠ CAUTION**

- When you use the service port, always use a charging hose, too.
- Check the leakage of refrigerant gas after tightening the cap.
- Must use a spanner and wrench when you open/tighten the stop valve.

# Appendix

## Troubleshooting

The table below list the self-diagnostic routines. For some of error, you must contact an authorized service center.

If an error occurs during the operation, it is displayed on the outdoor unit PCB MAIN-OUT.

PCB MAIN - OUT

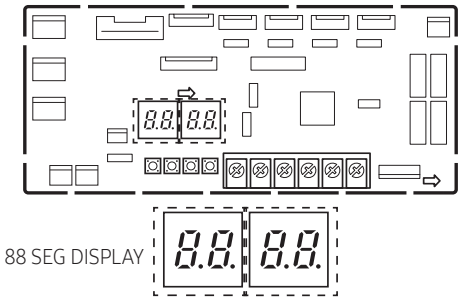


| Error Code | Explanation | Remark |
|---|---|---|
| E108 | ERROR DUE TO REPEATED ADDRESS SETTING(WHEN 2 OR MORE DEVICES HAS THE SAME ADDRESS WITHIN THE NETWORK) | |
| E190 | PIPE CHECK ERROR | |
| E199 | PIPE CHECK OPERATION HAS NOT BEEN COMPLETED | |
| E201 | COMMUNICATION ERROR BETWEEN INDOOR AND OUTDOOR UNIT(INSTALLATION NUMBER SETTING ERROR, REPEATED INDOOR UNIT ADDRESS, INDOOR UNIT COMM | |
| E202 | COMMUNICATION ERROR BETWEEN INDOOR AND OUTDOOR UNIT(COMMUNICATION ERROR ON ALL INDOOR UNITS, OUTDOOR UNIT COMMUNICATION CABLE ERROR) | |
| E203 | COMMUNICATION ERROR BETWEEN INVERTER PBA AND MAIN PBA | |
| E221 | ERROR ON AMBIENT TEMPERATURE SENSOR (SHORT OR OPEN) | |
| E237 | ERROR ON CONDENSOR TEMPERATURE SENSOR(SHORT OR OPEN) | |
| E251 | ERROR ON DISCHARGE TEMPERATURE SENSOR(SHORT OR OPEN) | |
| E320 | ERROR ON COMPRESSOR OLP TEMPERATURE SENSOR(SHORT OR OPEN) | |
| E330 | ERROR ON PIPE IN-A TEMPERATURE SENSOR(SHORT OR OPEN) | |
| E331 | ERROR ON PIPE IN-B TEMPERATURE SENSOR(SHORT OR OPEN) | |
| E332 | ERROR ON PIPE IN-C TEMPERATURE SENSOR(SHORT OR OPEN) | |
| E333 | ERROR ON PIPE IN-D TEMPERATURE SENSOR(SHORT OR OPEN) | |
| E335 | ERROR ON PIPE OUT-A TEMPERATURE SENSOR(SHORT OR OPEN) | |
| E336 | ERROR ON PIPE OUT-B TEMPERATURE SENSOR(SHORT OR OPEN) | |
| E337 | ERROR ON PIPE OUT-C TEMPERATURE SENSOR(SHORT OR OPEN) | |
| E338 | ERROR ON PIPE OUT-D TEMPERATURE SENSOR(SHORT OR OPEN) | |
| E401 | OUTDOOR UNIT FREEZING-SAFETY CONTROL(COMPRESSOR STOP) | |
| E404 | OUTDOOR UNIT OVERLOAD-SAFETY CONTROL(COMPRESSOR STOP) | |
| E416 | COMPRESSOR OPERATION STOP DUE TO DISCHARGE TEMPERATURE PROTECTION CONTROL | |

# Appendix

| Error Code | Explanation | Remark |
|---|---|---|
| E422 | HIGH PRESSURE BLOCKAGE CONTROL | |
| E440 | HEATING MODE RESTRICTION DUE TO HIGH AIR TEMPERATURE | |
| E441 | COOLING MODE RESTRICTION DUE TO LOW AIR TEMPERATURE | |
| E458 | FAN MOTOR ERROR | |
| E461 | OPERATION FAILURE OF COMPRESSOR | |
| E462 | COMPRESSOR OPERATION STOP DUE TO FULL LOAD CURRENT CONTROL | |
| E463 | COMPRESSOR OPERATION STOP DUE TO OLP TEMPERATURE CONTROL | |
| E464 | ERROR DUE TO OVER-CURRENT OF COMPRESSOR | |
| E465 | VOLTAGE-LIMIT ERROR OF COMPRESSOR | |
| E466 | ERROR DUE TO LOW/OVER VOLTAGE OF DC LINK IN INVERTER PBA | |
| E467 | ABNORMAL RPM IN COMPRESSOR OR WIRE FOR COMPRESSOR HAS NOT BEEN CONNECTED | |
| E468 | ERROR DUE TO OUTPUT CURRENT SENSOR OF INVERTER PBA(SHORT/OPEN) | |
| E469 | ERROR DUE TO DC LINK VOLTAGE SENSOR OF INVERTER PBA(SHORT/OPEN) | |
| E470 | OUTDOOR UNIT EEPROM READ/WRITE ERROR | |
| E471 | OUTDOOR UNIT EEPROM READ/WRITE ERROR(OTP) | |
| E474 | ERROR ON IPM/PFCM TEMPERATURE SENSOR OF INVERTER PBA(SHORT OR OPEN) | |
| E483 | OVERVOLTAGE OF H/W DETECT DC LINK | |
| E484 | PFC OVERLOAD(OVER CURRENT) ERROR | |
| E485 | ERROR DUE TO INPUT CURRENT SENSOR OF INVERTER PBA(SHORT/OPEN) | |
| E488 | INCOMING VOLTAGE SENSOR ERROR | |
| E500 | IPM/PFCM OVERHEAT ERROR | |
| E507 | ERROR DUE TO HIGH PRESSURE SWITCH OPEN OR COMPRESSOR DOWN BY HIGH PRESSURE | |
| E554 | THE REFRIGERANT LEAKS COMPLETELY FROM THE OUTDOOR UNIT | |
| E563 | ERROR DUE TO INDOOR UNIT SOFTWARE VERSION COMBINATION(INCOMPATIBLE INDOOR UNIT SOFTWARE ON A SYSTEM | |
| E590 | INVERTER EEPROM CHECKSUM ERROR | |

SAMSUNG